DIGITALE A/V SURROUND RECEIVER

FR975/00/01C/17

MX980D/37

Service
Service
Service

Service Manual

DOLBY DIGITAL

TABLE OF CONTENTS

	Page
Location Boards / System info	1-2
Technical Specification	1-3
Service Tool / Measurement setup / Safety	1-4
Warning / Handling Chip components	1-5
Abbreviations	1-6
Instruction for Use	2
Dismantling hints / Service positions	3-1
Dismantling hints MDM Module	3-2
Wiring diagram	3-3
Block diagram	4
Service Test program	5
Front Board	6
Tuner 95 diagram	7A
ECO 5 Tuner diagram	7B
Multi-Channel Decoding Module	8
Mains Board	9
Mono Board	10
Exploded view	11
S-VHS Board	12
Exploded view partslist	13
Partslist Mono Board	14

Safety regulations require that the set be restored to its original condition and that parts which are indentical with those specified be used.

Copyright 1995 Philips Consumer Electronics B.V. Eindhoven, The Netherlands
All rights reserved. No part of this publication may be reproduced, stored in a retrieval system or transmitted, in any form or by any means, electronic, mechanical, photocopying, or otherwise without the prior permission of Philips.

Published by MD 0016 Service Audio Printed in the Netherlands Subject to modification 3104 215 50060

PCS 102 481

PHILIPS

DISMANTLING HINTS

Dismantling of Front

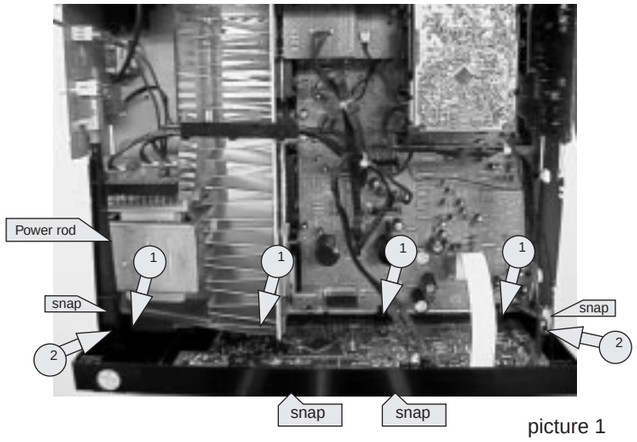

picture 1

1) Remove top cover
2) Remove power rod
3) Remove 6 x screw as shown in picture 1
4) Release two snaps (left & right side front)
5) Release two snaps on the bottom side front
6) Tipp down front as shown in picture 2

picture 2

Dismantling of mainstrafo

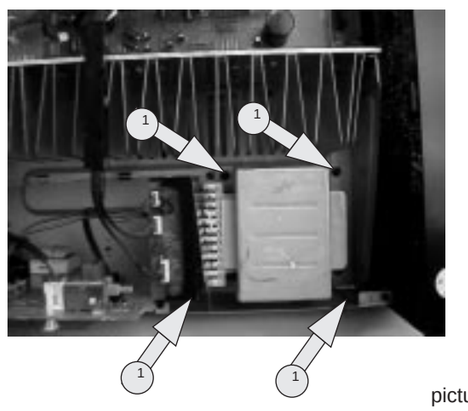

picture 8

1) Remove power rod
2) Remove 4x screw as shown in picture 8

Dismantling of mono board

1) Remove front . See picture 1
2) Remove whole front (disconnect the wires on the mono board coming from front)

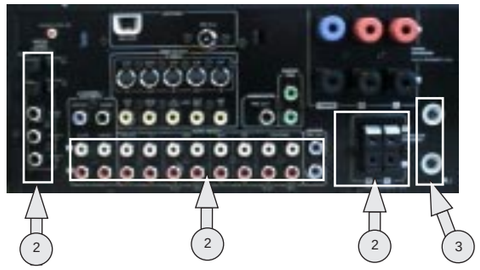

picture 3

3) Remove 14 x screws shown in mentionned aria . See picture 3

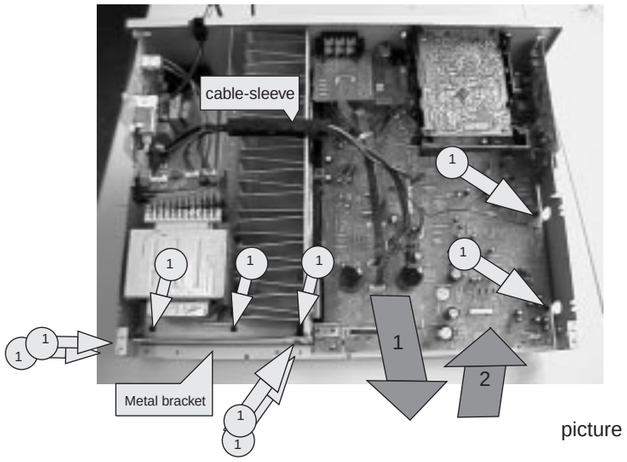

picture 4

4) Remove wires out the cable-sleeve.
5) Remove 7 x screw and remove metal bracket
6) Remove 2 x screw on mono board . See pictue 4
7) Remove mono board as shown arrow 1 & 2 . See picture 4
8) Bring the mono board in the service position as shown in picture 5

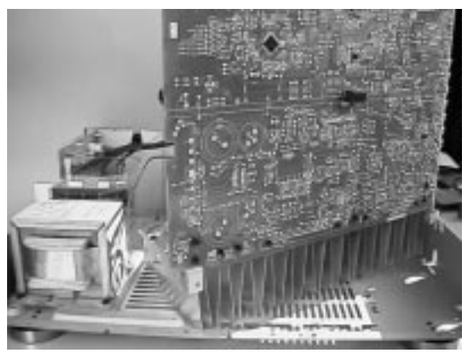

picture 5

Legend

1 = Torx M3x6mm (screw with big head)

2 = Torx 3x10mm

3 = Torx M3x6mm

Service position monoboard

1) Bring front in position as shown in picture 6
2) Snap nok of front in bottom to make front stable . See picture 7
3) Connect front wiring back to monoboard.
*The tuner module doesn't have to be connected. Use an other source (pe.CD)

picture 7

picture 6

Service position main trafo

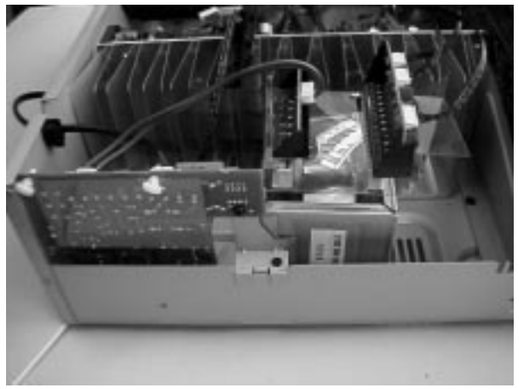

picture 9

1) Put main trafo as shown in picture 9

Handling service cover

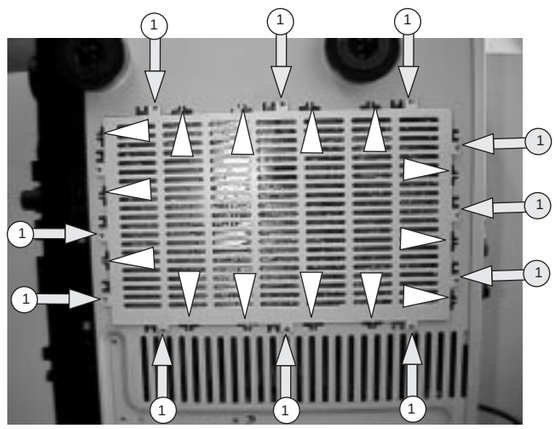

picture 10

1) To open the service cover cut 14 x lugs between cover and bottem . See picture 10 (▽)
2) To close the service cover put 11 x screw in mentionned holes. See picture 10
Service codenumber 12x Torx M3x6mm screw with big head = 4822 502 14659

DISMANTLING HINTS

Dismantling of MDM module

1) Remove all the screws mentionned in the arial . See picture 11

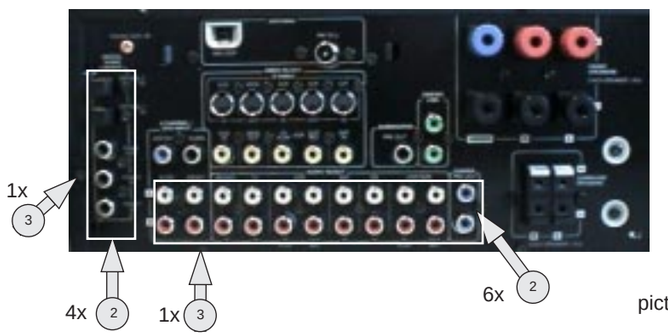

picture11

2) Remove backplate a little backwards. See arrow 1 (picture 12)
3) Pull module out the set as shown in picture 12

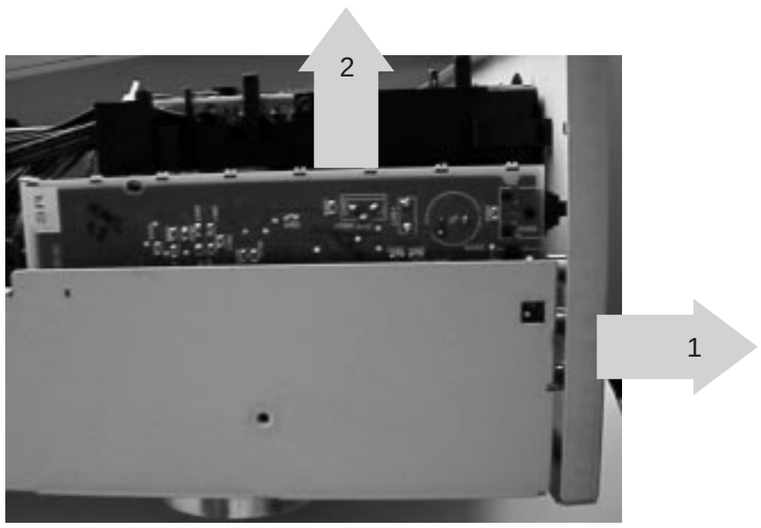

picture12

Legend

1 = Torx M3x6mm (screw with big head)

2 = Torx 3x10mm

3 = Torx M3x6mm

WIRING DIAGRAM

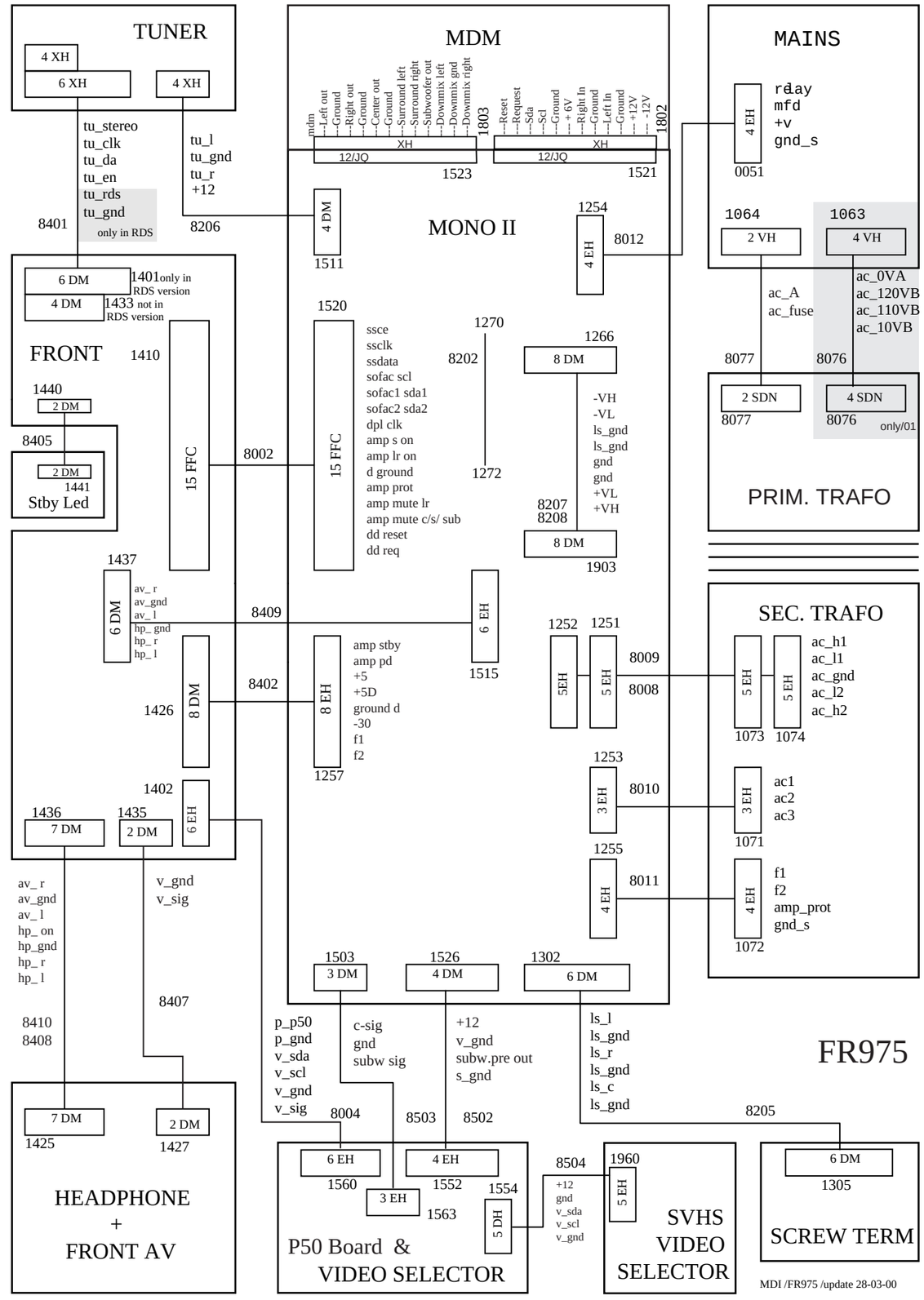

4-1

BLOCKDIAGRAM

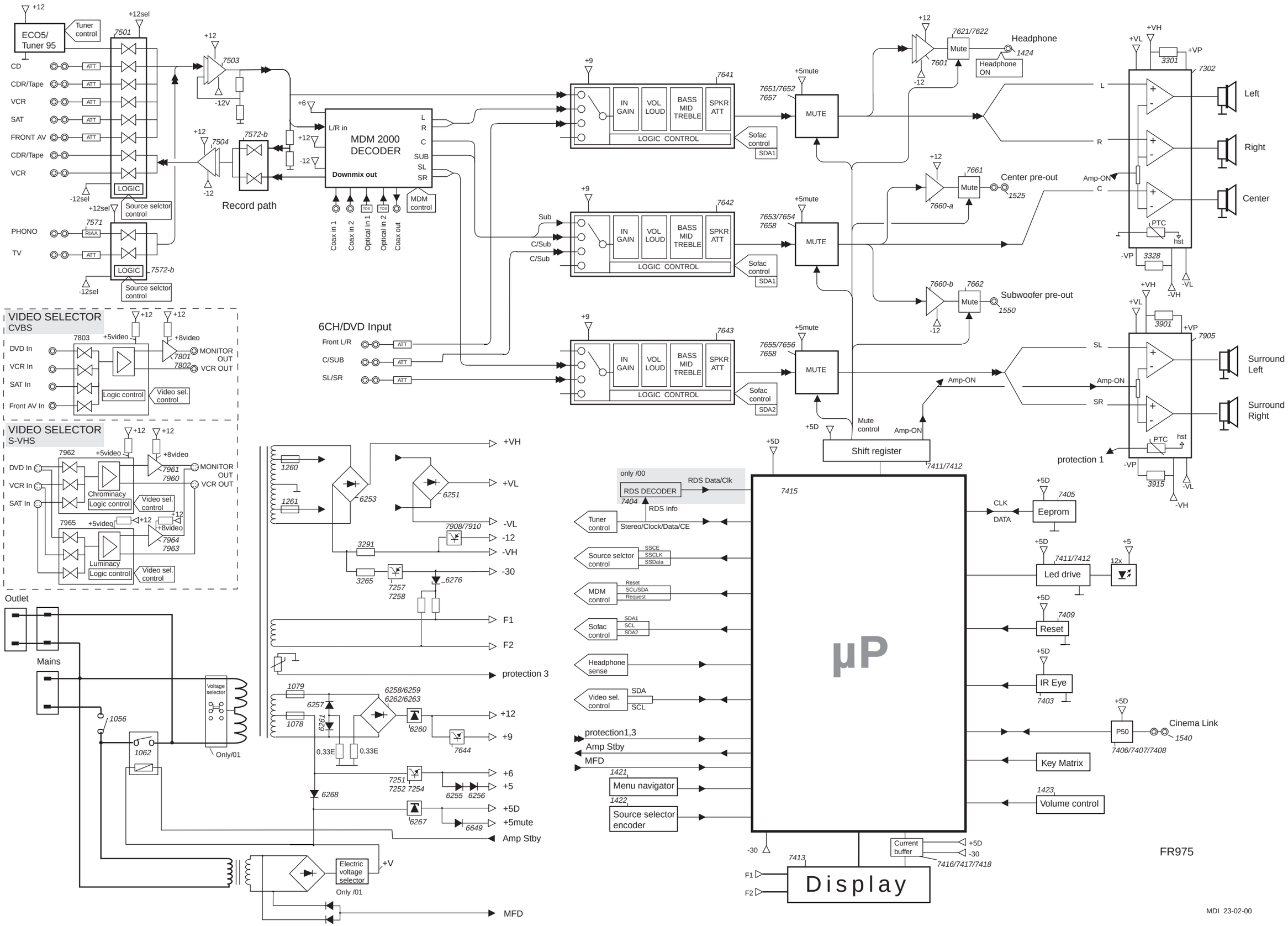

5-1

SERVICE TEST PROGRAM

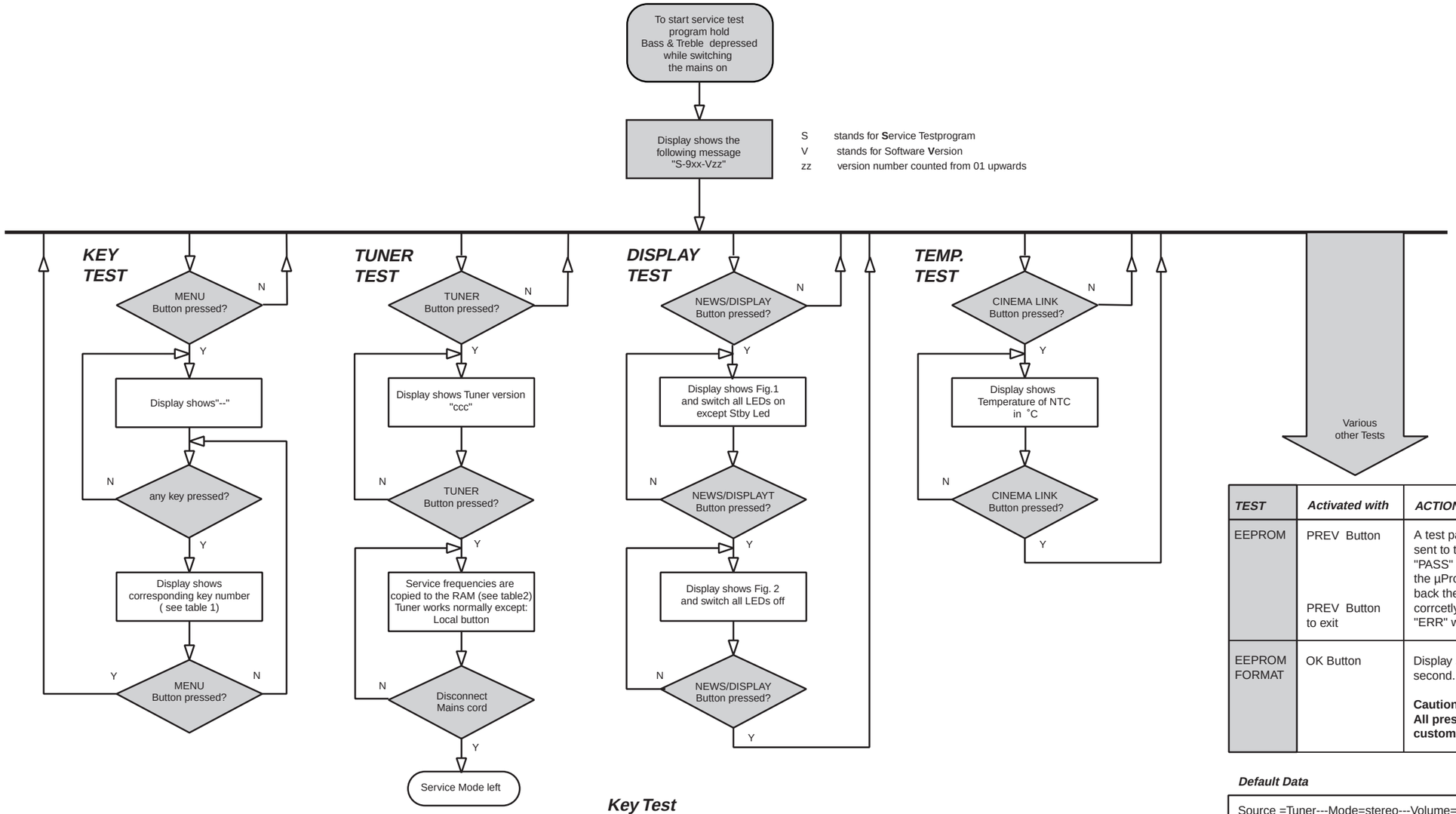

TEST	Activated with	ACTION
EEPROM	PREV Button PREV Button to exit	A test pattern will be sent to the Eeprom. "PASS" is displayed if the µProcessor read back the test pattern corrcetly, otherwise "ERR" will be displayed.
EEPROM FORMAT	OK Button	Display shows"NEW" for 1 second. **Caution!** **All presets from the customer will be Lost**

Tuner Test

Display info Version	Europe "EUR" /00	East Eur. 3-band "EEL" /14	East Eur. 2-band "EEU" /14	USA "USA" /17	Oversea "OSE" /01
Preset 1	87.5MHz	65.81MHz	65.81MHz	87.5MHz	87.5MHz
2	108MHz	108MHz	108MHz	108MHz	108MHz
3	531kHz	74MHz	74MHz	530kHz	531kHz
4	1602kHz	87.5MHz	87.5MHz	1700kHz	1602kHz
5	558kHz	531kHz	531kHz	560kHz	558kHz
6	1494kHz	1602kHz	1602kHz	1500kHz	1494kHz
7	153kHz	558kHz	558kHz	98MHz	----
8	279kHz	1494kHz	1494kHz	----	----
9	198kHz	153kHz	98MHz	----	----
10	98MHz	279kHz	70.01MHz	----	----
11	----	198kHz	----	----	98MHz

Table 2

This table is valid for all types of tuners.
Custormer presets will not changed after this Tuner test.
If a station is tuned then the display flag "OK" will be ON otherwise it will be OFF.
If the tuned frequency is carrying RDS information, the display flag "RDS" will be ON.
Oversea version: the tuning grid can be switched between 9kHz and 10kHz by pressing the key "TUNER" for longer then 2 seconds. "Grid 9" or "Grid10" will be shown accordingly.
Grid 9kHz is in FM 50kHz , Grid 10kHz is in FM 100kHz
Europe version: the LW can be switched On and Off by pressing the key "TUNER" for longer than 2 seconds. LW OFF or LW ON will be shown accordingly.

Key Test

Key	Number	Key	Number	Key	Number
Cinema	1	Sens	7	Loudness	13
Surr. on/off	2	*News T/A	8	Bass	14
Surr. Mode	3	Prev.Exit	9	Treble	15
Virt. Mode	4	Setup Menu	- -	*Front A/V	16
Tuner	5	Next	11		
*Radio Text	6	Enter/OK	12		

*Button Radio Text change in Name/Frequency in /01/17 version
Button News T/A change in Display in /01/17 version
Button Front A/V not in FR965

Table 1

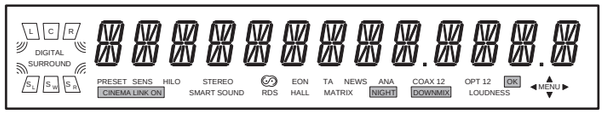

Figure 1

Default Data

Source =Tuner---Mode=stereo---Volume=10
Bass=0---Treble=0---Loudness=Off
#Effects: 3D Surr=100
#Volume balance:
Vol Front-L=0---Vol Front-R=0---Vol Center=0
Vol Rear-L=0---Vol Rear-R=0---Vol Subwoofer=0
#Speaker setup:
Subwoofer Present=Yes---Center=Yes---Rear=Yes
#Speaker Sizes:
Front Size=Large--- Center Size=Large---Rear Size=Large
#Speaker Distance:
Dist L/R=3meter---Dist Center=3meter---Dist Rear=3meter
For USA /17:
Dist L/R=10Feet---Dist Center=10Feet---Dist Rear=10Feet.
#Select input: DVD--->Coax1

For /01: FM grid is 50kHz : AM grid is 9kHz

Figure 2

mdi 04-04-00

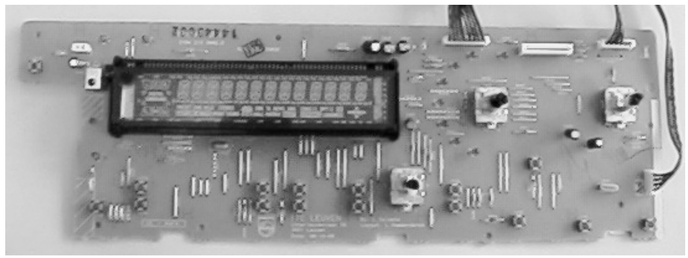

FRONT BOARD

TABLE OF CONTENTS

FTD Display pin connections..... 6-2
Headphone & Led board layout 6-3
Circuit diagram 6-4
Component layout 6-5
Partslist 6-6

FTD DISPLAY PIN CONNECTIONS

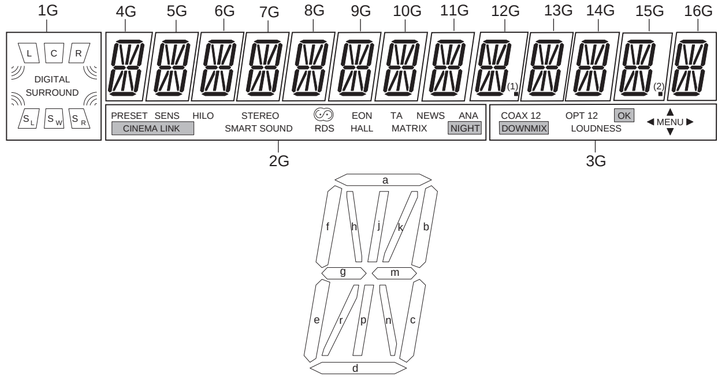

	1G	2G	3G	4G~11G	12G	13G ,14G	15G	16G
P1	L	MATRIX	DOWNMIX	a	a	a	a	a
P2	R	NIGHT	COAX	j p	j p	j p	j p	j p
P3	C	ANA	1(coax)	h	h	h	h	h
P4	(C)	LO	2(coax)	k	k	k	k	k
P5	(S_L)	CINEMA LINK	OPT	b	b	b	b	b
P6	(S_R)	EON	1(opt)	f	f	f	f	f
P7	S_W	HALL	2(opt)	m	m	m	m	m
P8	S (L)	HI	LOUDNESS	g	g	g	g	g
P9	L	NEWS	▼	c	c	c	c	c
P10	S (R)	PRESET	MENU	e	e	e	e	e
P11	R	RDS	▶	r	r	r	r	r
P12		SMART SOUND	OK	n	n	n	n	n
P13		STEREO	◀	d	d	d	d	d
P14	SURROUND	TA	▲	-	■ (1)	-	■ (2)	-
P15	DIGITAL	SENS	-	-	-	-	-	-

Pin Connection

Pin numbers	50	49	48	47	46	45	44	43	42	41	40	39	38	37	36	35	34	33	32	31	30	29	28	27	26	25	24	23	22	21	20	19	18	17	16	15	14	13	12	11	10	9	8	7	6	5	4	3	2	1
Connection	1G	2G	3G	4G	5G	6G	7G	8G	9G	10G	11G	12G	13G	14G	15G	16G	NC	NC	NC	NC	NC	NC	NC	P15	P14	P13	P12	P11	P10	P9	P8	P7	P6	P5	P4	P3	P2	P1	NC	NC	NC	NC	NC	NC	NC	NC	NP	NP	F11	F11

Pin numbers	62	61	60	59	58	57	56	55	54	53	52	51
Connection	F2	F2	NP	NP	NC	NC	NC	NC	NC	NC	NC	NC

Note: FI , F2 --------- Filament
NC ---------- No connection
NP ---------- No pin
1G ~ 16G ----- Grid

HEADPHONE BOARD - COMPONENT VIEW

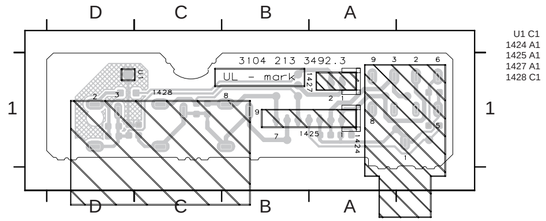

HEADPHONE BOARD - COPPER SIDE VIEW

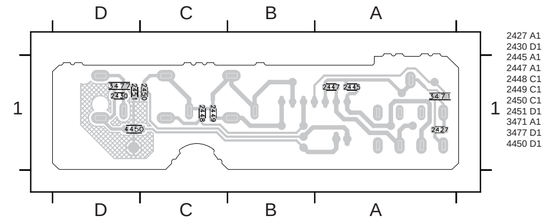

LED BOARD - COMPONENT VIEW

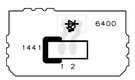

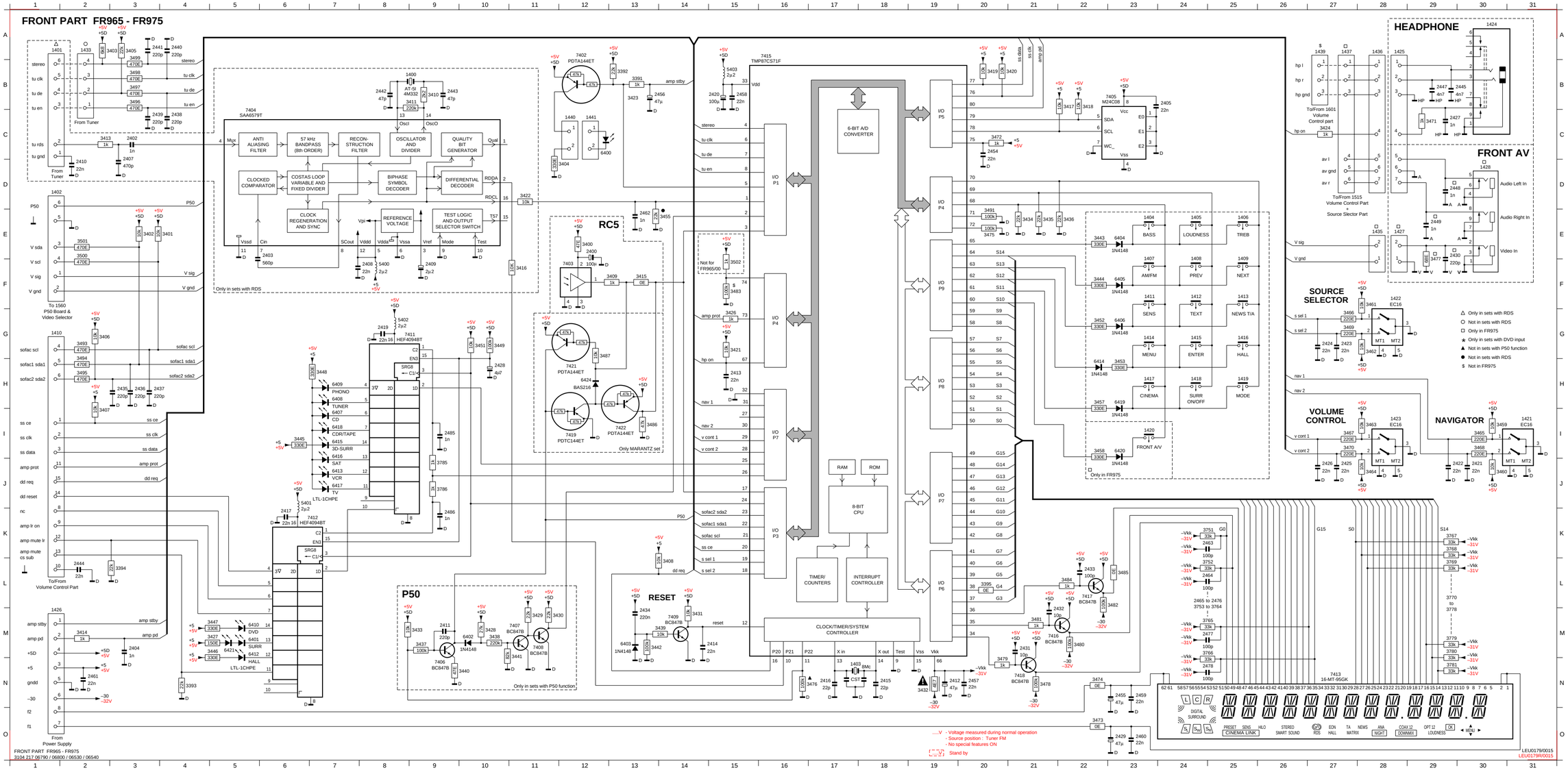

1400	B8	3418	B22	7404	C5
1401	A1	3419	B20	7405	B22
1402	D1	3420	B20	7406	N9
1403	N17	3421	G15	7407	M11
1404	E23	3422	D11	7408	M11
1405	E24	3423	B13	7409	M14
1406	E25	3424	C27	7411	G8
1407	F23	3426	G15	7412	K6
1408	F24	3427	M4	7413	N27
1409	F25	3428	M10	7415	A16
1410	G1	3429	M11	7416	M21
1411	F23	3430	M11	7417	L22
1412	F24	3431	M14	7418	N21
1413	F25	3432	N19	7419	I12
1414	G23	3433	M9	7421	H12
1415	G24	3434	E21	7422	I13
1416	G25	3435	E21		
1417	H23	3436	E22		
1418	H24	3437	M9		
1419	H25	3438	M10		
1420	I23	3439	M13		
1421	I31	3440	N10		
1422	F28	3441	N11		
1423	I28	3442	M13		
1424	A30	3443	E22		
1425	A28	3444	F22		
1426	M1	3445	I6		
1427	E28	3446	M4		
1428	D30	3447	M4		
1433	A2	3448	H7		
1435	E28	3449	G10		
1436	A28	3451	G10		
1437	A27	3452	G22		
1439	A27	3453	H23		
1440	C12	3455	E14		
1441	C12	3457	H22		
2400	E12	3458	I22		
2402	C3	3459	I30		
2403	E6	3460	J30		
2404	M3	3461	F28		
2405	B24	3462	G28		
2407	D3	3463	I28		
2408	F8	3464	J28		
2409	F9	3465	I30		
2410	D2	3466	G27		
2411	M9	3467	I27		
2412	N19	3468	I30		
2413	H15	3469	G27		
2414	M14	3470	I27		
2415	N18	3471	C29		
2416	N17	3472	C20		
2417	K6	3473	O22		
2419	G8	3474	N22		
2420	B15	3475	E20		
2421	J30	3476	N16		
2422	J29	3477	F29		
2423	G27	3478	N21		
2424	G27	3479	N20		
2425	J27	3480	M22		
2426	J27	3481	M21		
2427	C29	3482	L23		
2428	H10	3483	F15		
2429	O23	3484	L22		
2430	E29	3485	L23		
2431	M21	3486	I13		
2432	M21	3487	G12		
2433	L22	3491	E20		
2434	M13	3493	G2		
2435	H3	3494	H2		
2436	H3	3495	H2		
2437	H3	3496	B3		
2438	C4	3497	B3		
2439	C3	3498	B3		
2440	A4	3499	A3		
2441	A3	3500	E2		
2442	B8	3501	E2		
2443	B9	3502	F15		
2444	L2	3751	K24		
2445	B29	3752	L24		
2447	B29	3753	M24		
2448	D29	3764	M25		
2449	E29	3765	M24		
2454	C20	3766	M24		
2455	N23	3767	K29		
2456	B13	3768	K29		
2457	N20	3769	L29		
2458	B15	3770	L29		
2459	N23	3778	M29		
2460	O23	3779	M29		
2461	N2	3780	M29		
2462	E13	3781	N29		
2463	K24	3785	J9		
2464	L24	3786	J9		
2465	L24	5400	F8		
2476	L25	5401	J6		
2477	M24	5402	G8		
2478	N24	5403	B15		
2485	I9	6400	C12		
2486	K9	6401	M5		
3391	B13	6402	M10		
3392	B13	6403	M13		
3393	N4	6404	E23		
3394	L3	6405	F23		
3395	L20	6406	G23		
3400	E12	6407	I7		
3401	E4	6408	H7		
3402	E3	6409	H7		
3403	A2	6410	M5		
3404	D12	6412	M5		
3405	A3	6413	J7		
3406	G2	6414	H22		
3407	I2	6415	I7		
3408	L14	6416	I7		
3409	F12	6417	J7		
3410	B9	6418	I7		
3411	B8	6419	H23		
3413	C2	6420	I23		
3414	M2	6421	M5		
3415	F13	6424	H12		
3416	F11	7402	A12		
3417	B22	7403	F12		

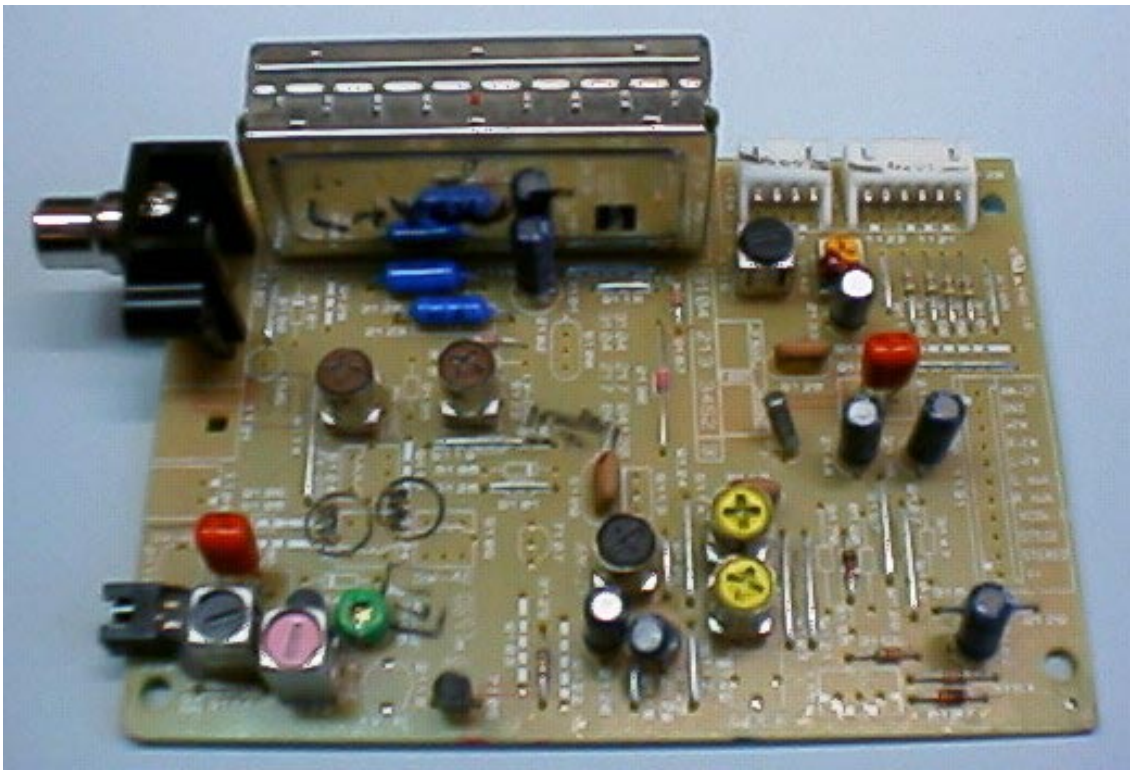

TUNER 95 BOARD

TABLE OF CONTENTS

Adjustment table 7A-2
Blockdiagram 7A-3
Component layout 7A-4
Circuit diagram 7A-5
Partslist 7A-6

TUNER 95 bis Adjustment Table (FM, MW, LW with Frame antenna)

Waverange	Input frequency	Input	Set tuned to	Adjust	Output	Scope / Voltmeter
VARICAP ALIGNMENT						
FM (50)			108 MHz	check		7 ... 9V
87.5 - 108 MHz			87.5 MHz	check		1.3 ... 2V
MW (9)			1602 kHz	5123		8.3V ± 0.2V
531 - 1602 kHz			531 kHz	check	6	1V ± 0.4V
LW (3)			279 kHz	5122		8.3V ± 0.2V
153 - 279 kHz			153 kHz	check		1V ± 0.4V
FM – DETECTION						
FM	98 Mhz 1mV continuous wave ***short pin 21 (IC7101) to ground***	A	98 MHz	5107	1 2	0mV ± 3mV
FM – VCO						
FM	98 Mhz 1 mV continuous wave	A	98 MHz	3142	3	152kHz ± 1 kHz
DISTORTION						
FM	98 Mhz 1 mV 90 % L + 9 % pilot mod = 1kHz	A	98MHz	mixcoil inside Tuner 1110	4	Distortion minimum
AM – IF						
MW	450kHz Δf = 10kHz Low as possible Swept signal	100nF 50E	MW	5111	7	symmetrical and max. height ↕
				5112		
	450kHz continuous wave	C		5114	1 2	0mV ± 2mV
AM - RF						
MW	558kHz Mod = 1kHz 30 % AM 1494 kHz	B	558kHz	5102	7	MAX ↕
			1494kHz	2106		
LW	198kHz mod = 1kHz 30 % AM	*	198kHz	5103		MAX

adjtable for 3104 217 04121/04341

* Signal send via a frame antenna
(..) = tuning grid in kHz

↕ repeat

7A-3

BLOCKDIAGRAM

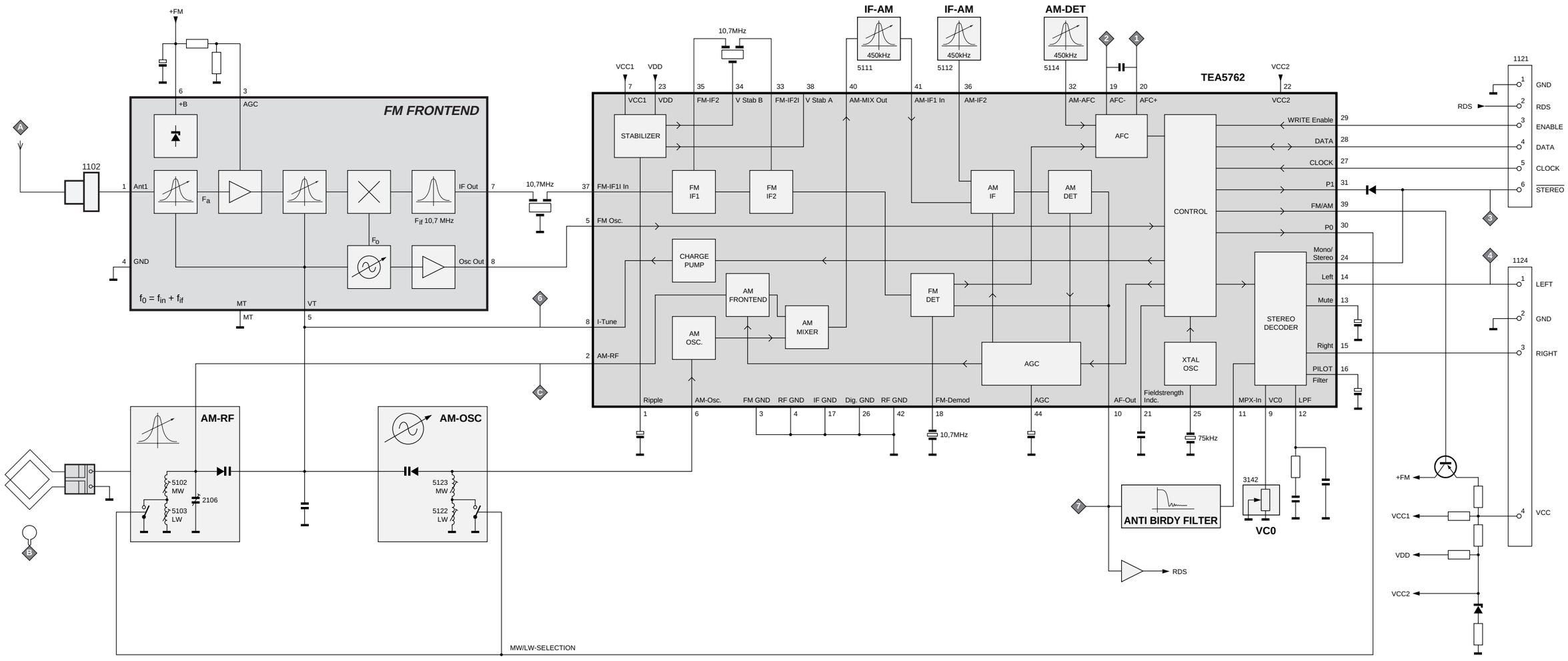

1102	D1	1124	F21	2107	J6	2122	M7	2128	I13	2132	I17	2136	H19	2140	C14	2144	K20	2150	C6
1103	G2	1126	E20	2108	L2	2123	L7	2129	I8	2133	G18	2137	G19	2141	H15	2145	E19	2151	H12
1110	D4	2102	C2	2109	L3	2125	L7	2130	J20	2134	G19	2138	H18	2142	K19	2147	E19	2152	I11
1121	C21	2106	J4	2120	K7	2127	H16	2131	I17	2135	F19	2139	I7	2143	K20	2148	E19	2158	L18

2160	I15	3104	G4	3120	H5	3128	L9	3132	J7	3141	I16	3145	I17	3151	I20	3155	J20	3161	D19
2161	I15	3107	C6	3123	I6	3129	K8	3134	L6	3142	I16	3146	L20	3152	F20	3158	E19	3162	I15
2162	H20	3108	J1	3124	K7	3130	K8	3137	L5	3143	K17	3147	N20	3153	G20	3159	E19	3163	J8
3103	G3	3109	K1	3125	L11	3131	M10	3140	F7	3144	K17	3150	H19	3154	J20	3160	D19	3164	I20

3167	I20	3177	M10	3184	I8	3192	C12	5107	J12	5112	C12	5122	L7	6106	H5	7103	K17	7110	I19
3169	L5	3178	N20	3185	I13	3197	L11	5109	B6	5114	C13	5123	K7	6107	K20	7104	J2	7122	L9
3172	B6	3181	C7	3186	K16	5102	I3	5110	C9	5115	J15	6105a	I5	6120	E17	7105	K2	7124	L6
3173	B6	3183	I13	3188	M20	5103	L4	5111	C11	5121	I15	6105b	I6	7101	C15	7109	L10		

TUNER 95 bis

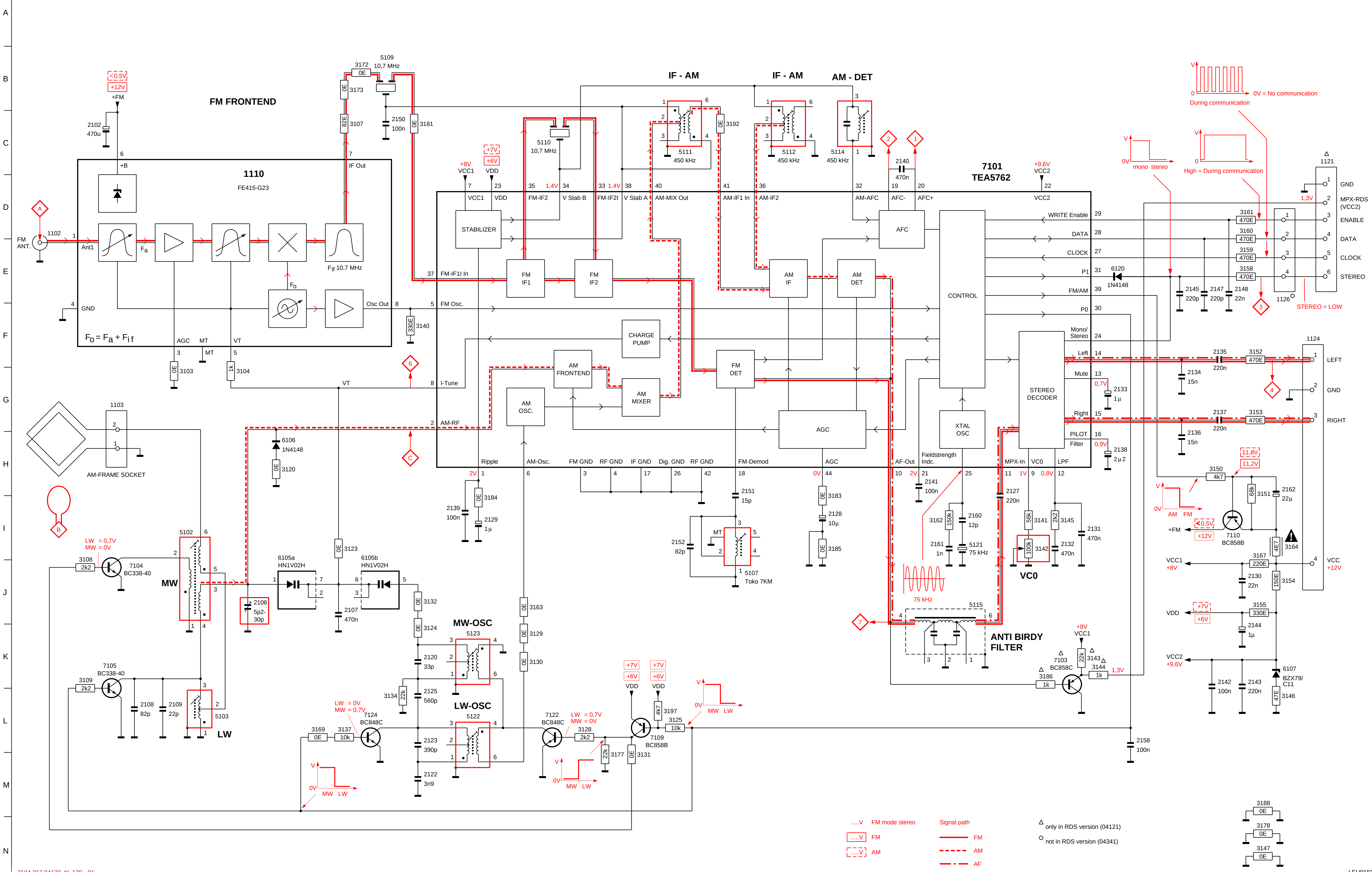

BLOCKDIAGRAM

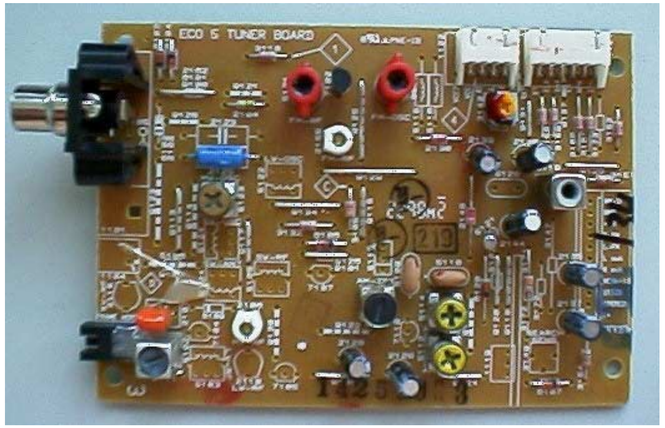

TUNER BOARD ECO5

TABLE OF CONTENTS

Blockdiagram 7B-1
Component layout 7B-2
Adjustmanttable 7B-2
Circuit diagram 7B-3
Partslist 7B-4

7B-1

TUNER BOARD
ECO 5 *systems*

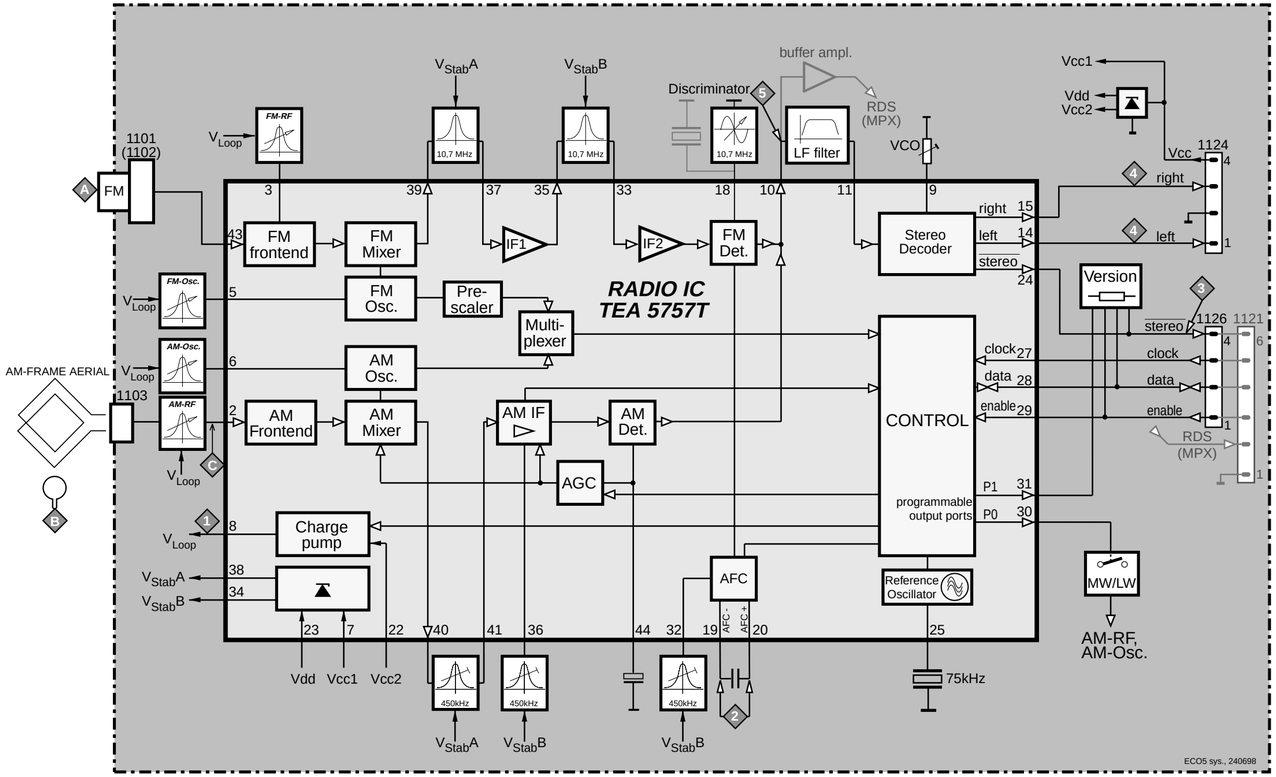

7B-3

TUNER BOARD ECO5 / Systems

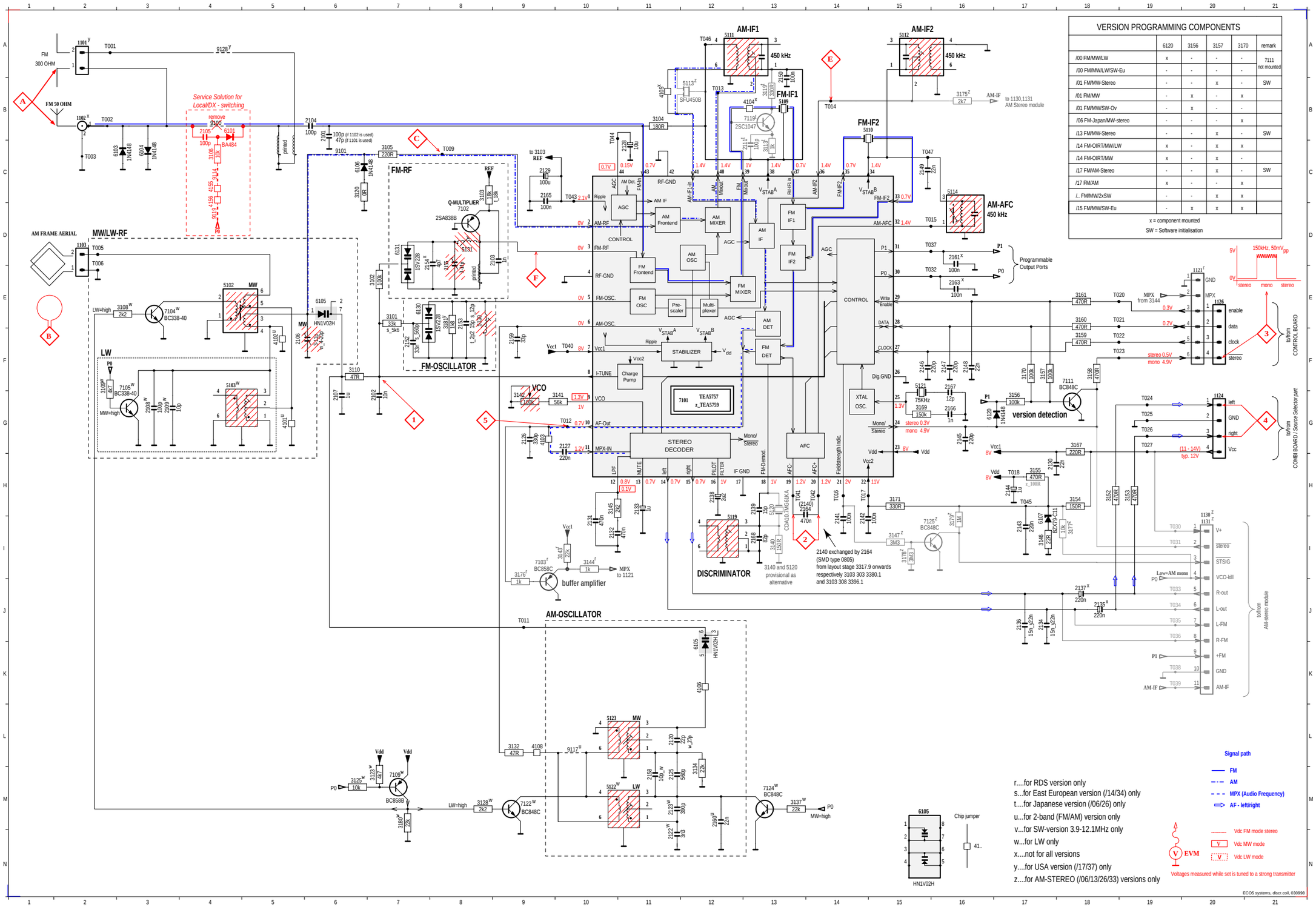

VERSION PROGRAMMING COMPONENTS

	6120	3156	3157	3170	remark
/00 FM/MW/LW	x	-	-	-	7111 not mounted
/00 FM/MW/LW/SW-Eu	-	-	-	-	
/01 FM/MW-Stereo	-	-	x	-	SW
/01 FM/MW	-	x	-	x	
/01 FM/MW/SW-Ov	-	x	-	-	
/06 FM-Japan/MW-stereo	-	-	-	x	
/13 FM/MW-Stereo	-	-	x	-	SW
/14 FM-OIRT/MW/LW	x	-	x	x	
/14 FM-OIRT/MW	x	-	x	-	
/17 FM/AM-Stereo	-	-	x	-	SW
/17 FM/AM	x	-	-	x	
/.. FM/MW/2xSW	-	-	x	x	
/15 FM/MW/SW-Eu	-	x	x	x	

x = component mounted
SW = Software initialisation

r....for RDS version only
s...for East European version (/14/34) only
t....for Japanese version (/06/26) only
u...for 2-band (FM/AM) version only
v...for SW-version 3.9-12.1MHz only
w...for LW only
x....not for all versions
y....for USA version (/17/37) only
z....for AM-STEREO (/06/13/26/33) versions only

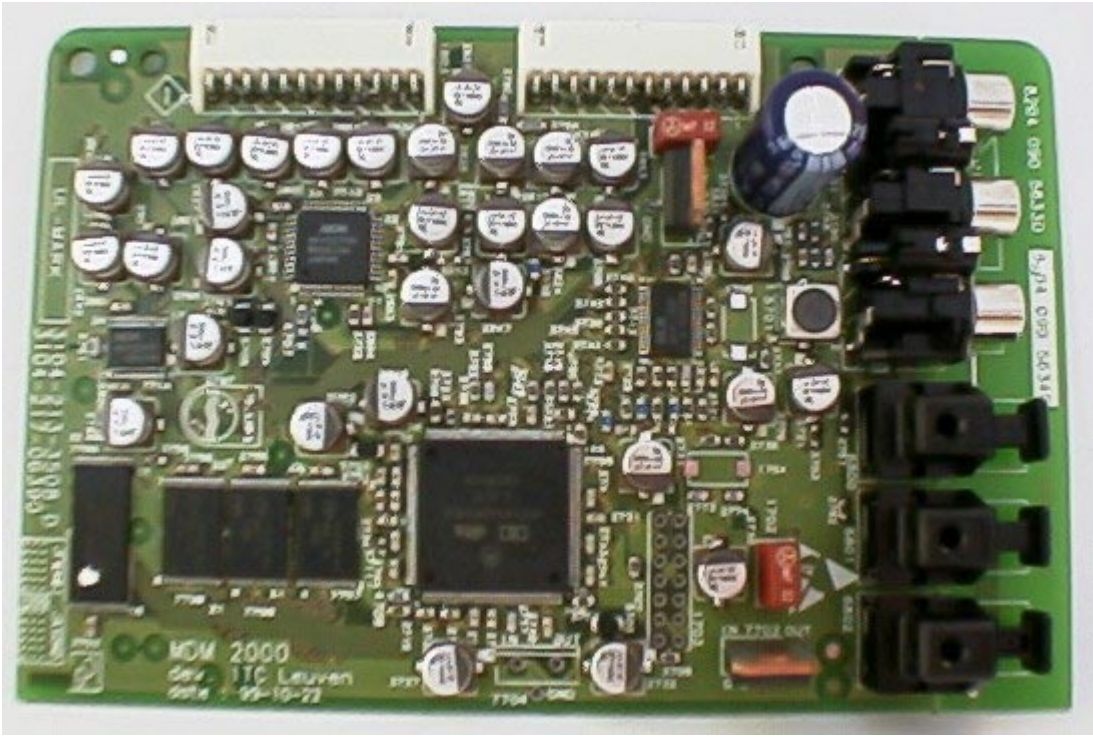

MULTI-CHANNEL DECODING MODULE

TABLE OF CONTENTS

Troubleshooting 8-2
Block-diagram 8-3
Partslist 8-4

MULTI-CHANNEL DECODING MODULE - Troubleshooting

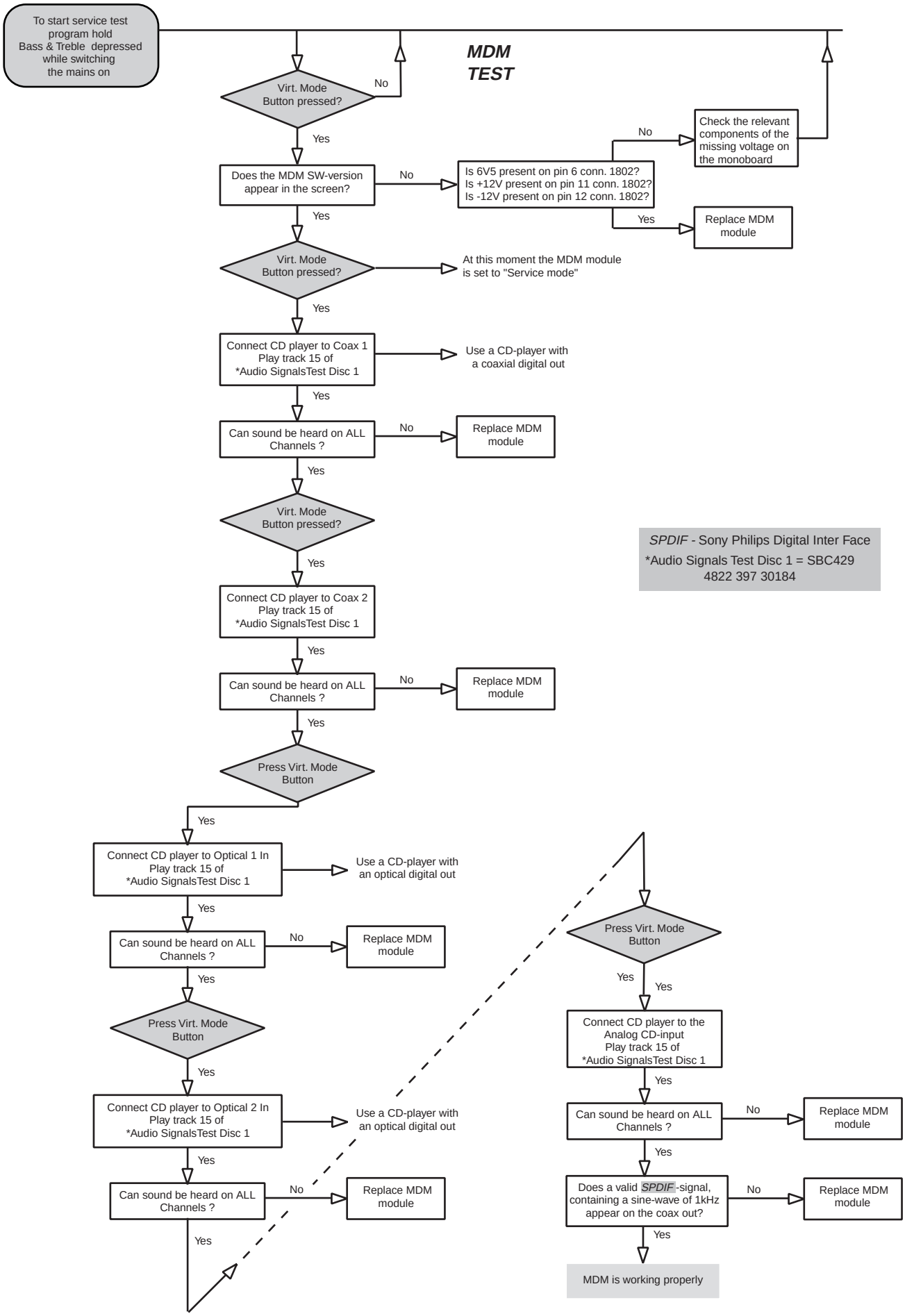

MULTI CHANNEL DECODING MODULE 2000

MDM200

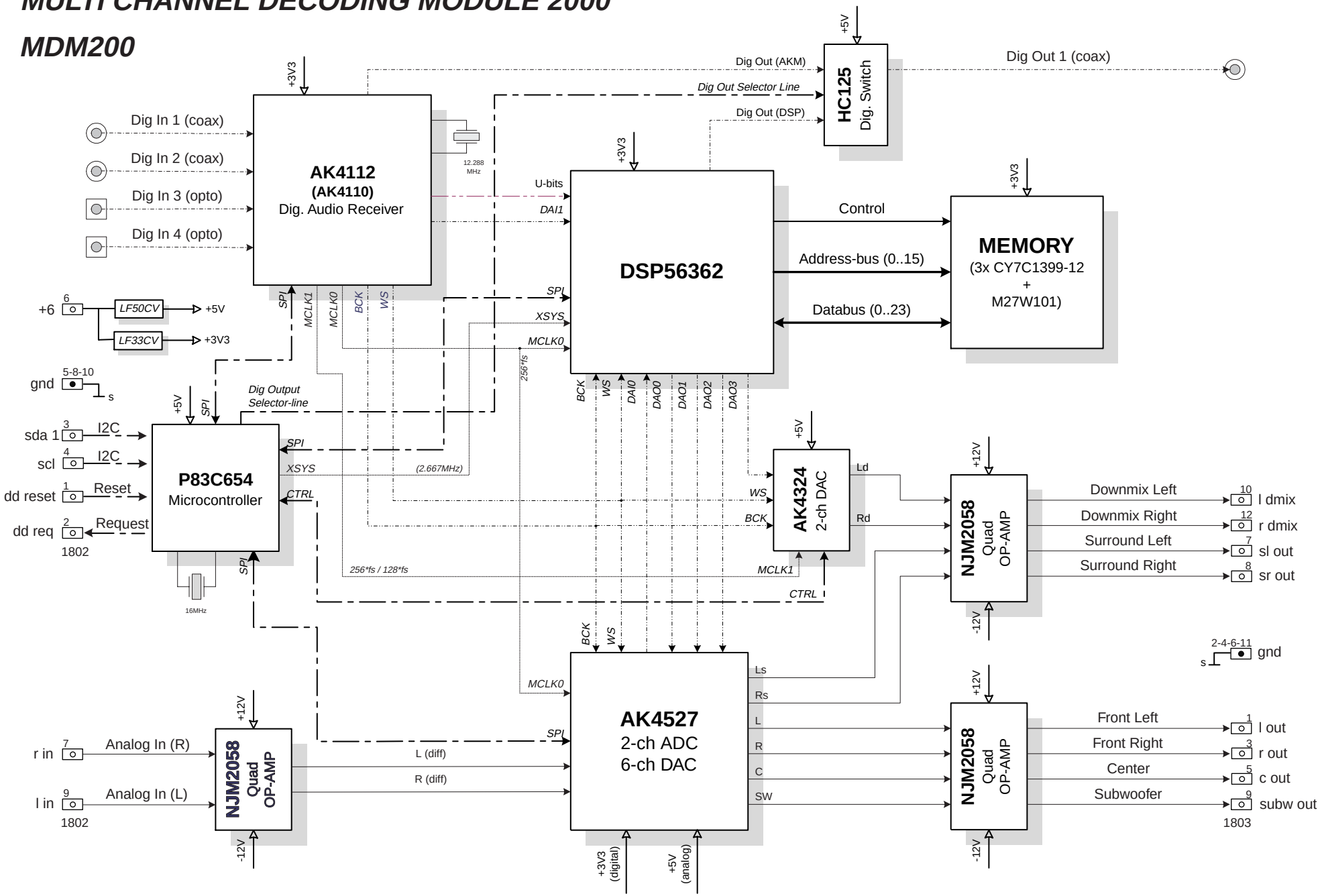

ELECTRICAL PARTSLIST - MDM MODULE

1003	3104 217 06390	MDM 2000 MODULE
1701	4822 252 51172	FUSE 0,315A
1702	4822 252 51172	FUSE 0,315A
1704	2422 543 01118	CRYSTAL 16MHZ
1705	2422 543 01132	CRYSTAL 12MH28
1800	4822 267 31729	COAX OUT CONN.
1801	4822 267 31448	COAX IN CONNECTOR
1802	2422 025 10253	CON 12P. MALE
1803	2422 025 10253	CON 12P. MALE
2702	4822 123 14025	16V 2200U 20%
6800	4822 218 11487	CONN. FIBER-GLASS GP1F32R
6801	4822 218 11487	CONN. FIBER-GLASS GP1F32R
7701	9322 146 09687	LF50CV
7702	4822 209 16978	LF33CV

Note: Only the parts mentioned in this list are normal service parts.

Component side view

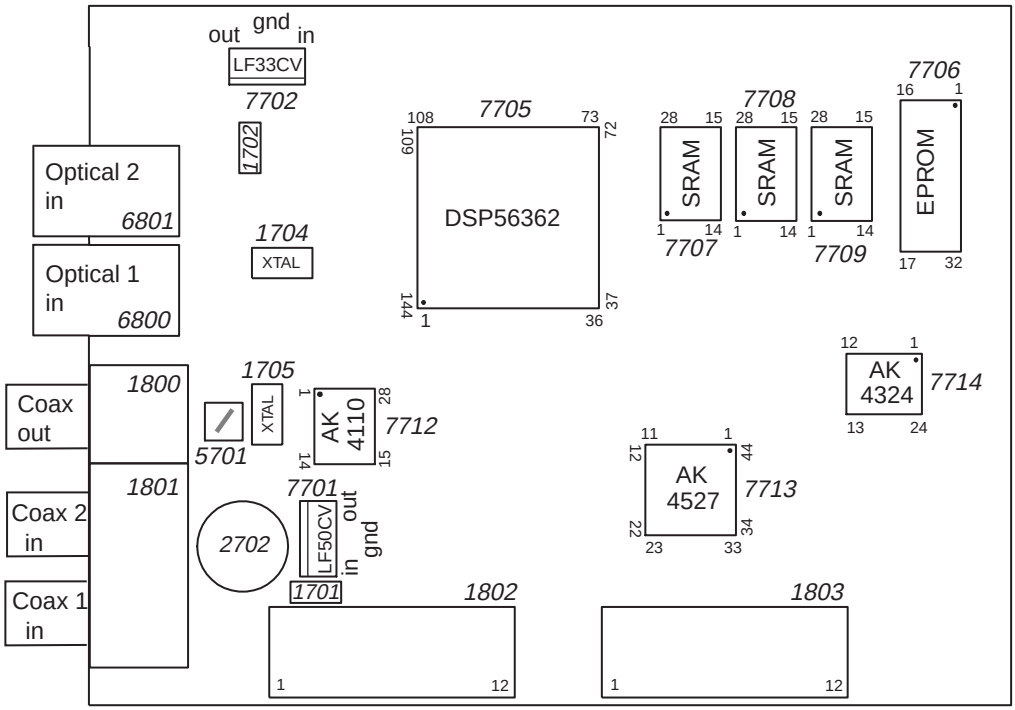

Copper side view

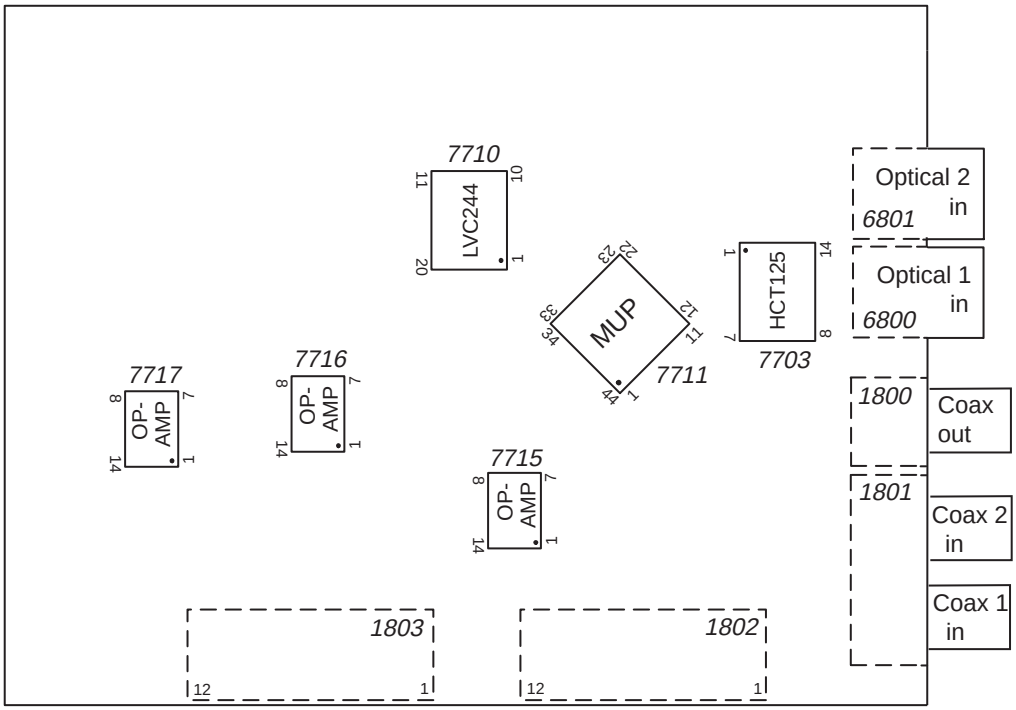

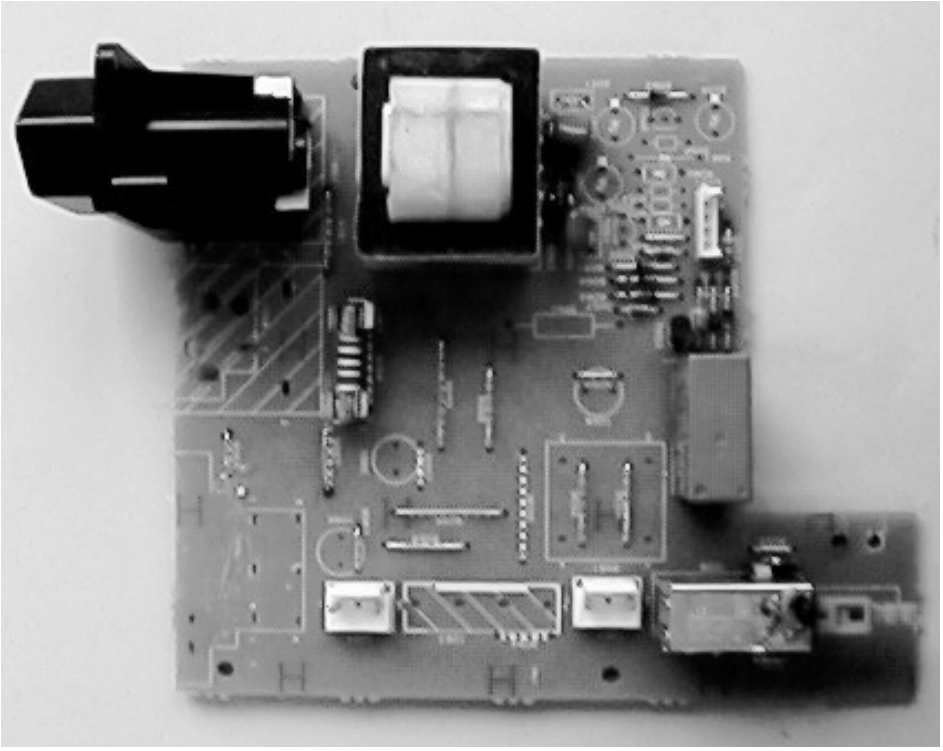

MAINS BOARD

TABLE OF CONTENTS

Circuit diagram 9-2
Component layout 9-3
Partslist 9-5

MAINS BOARD - CIRCUIT DIAGRAM

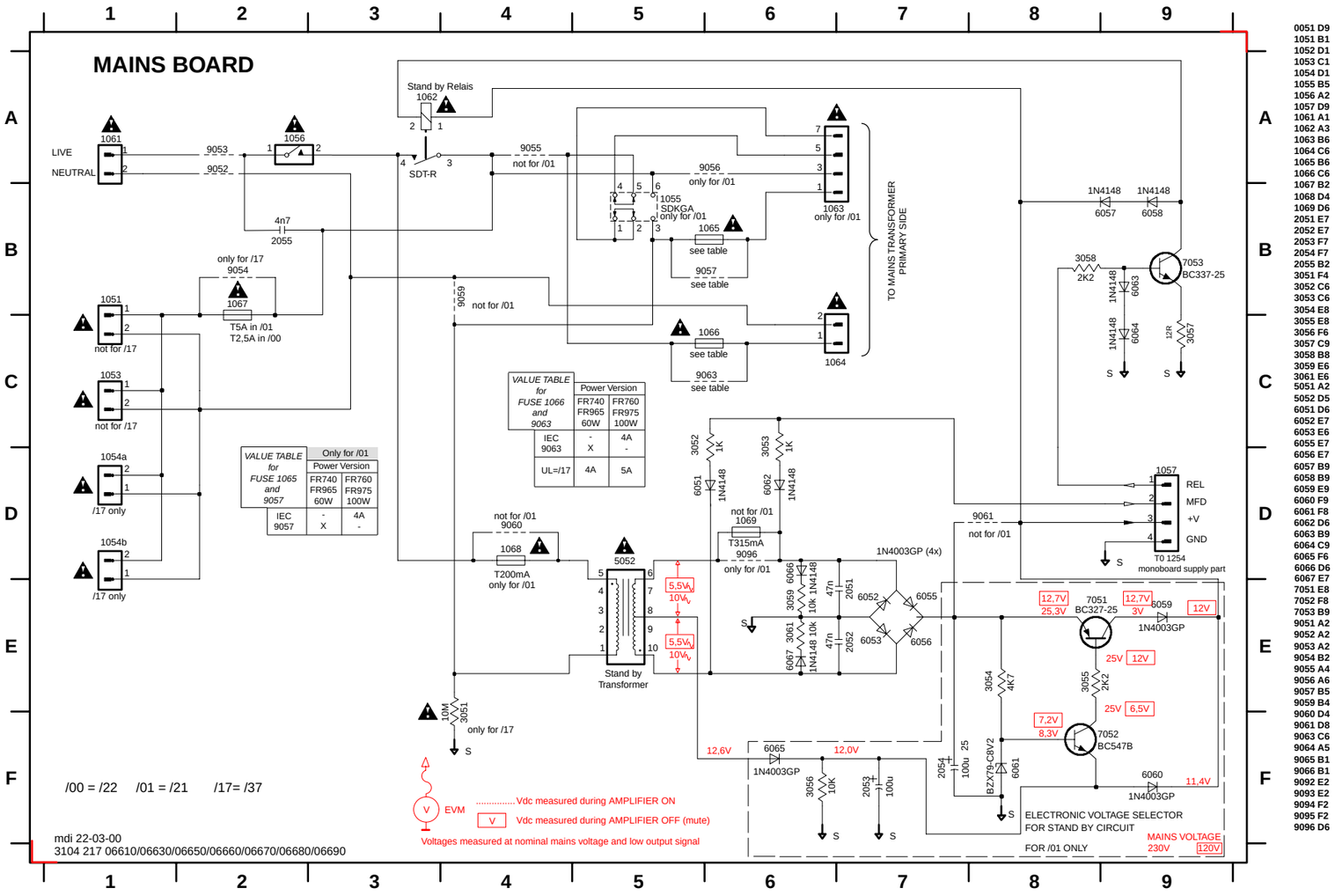

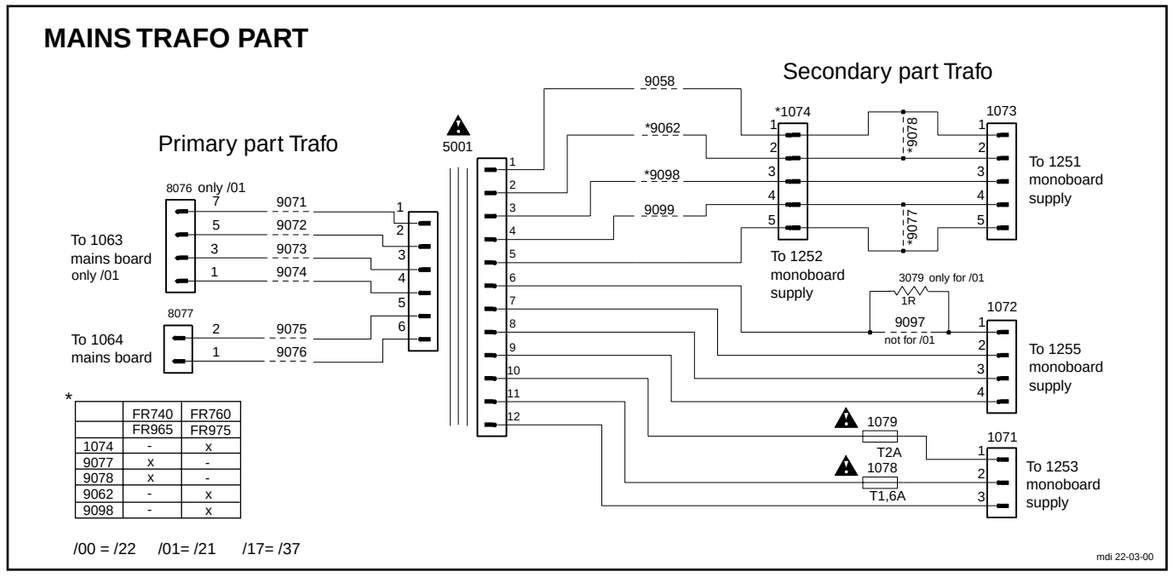

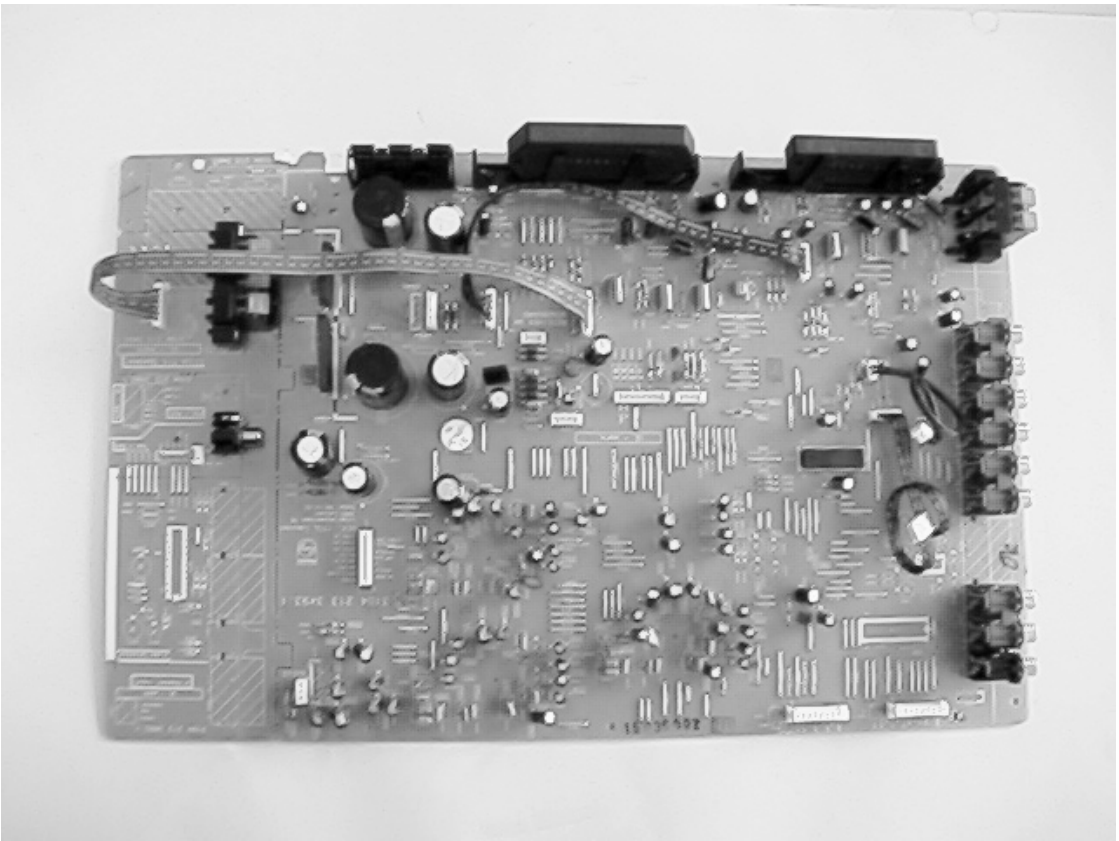

MONO2 BOARD

TABLE OF CONTENTS

Measurement hint 10-2
P50/Speaker/Video Selector layout 10-3
Circuit diagram Source selector 10-4
Circuit diagram Volume controle 10-5
Circuit diagram Supply 10-6
Circuit diagram Amplifier 10-7
Component layout 10-8
Mappings Components & Chips side..... 10-9
Component layout copper side view 10-10

10-4

SOURCE SELECTOR PART FR965 - FR975

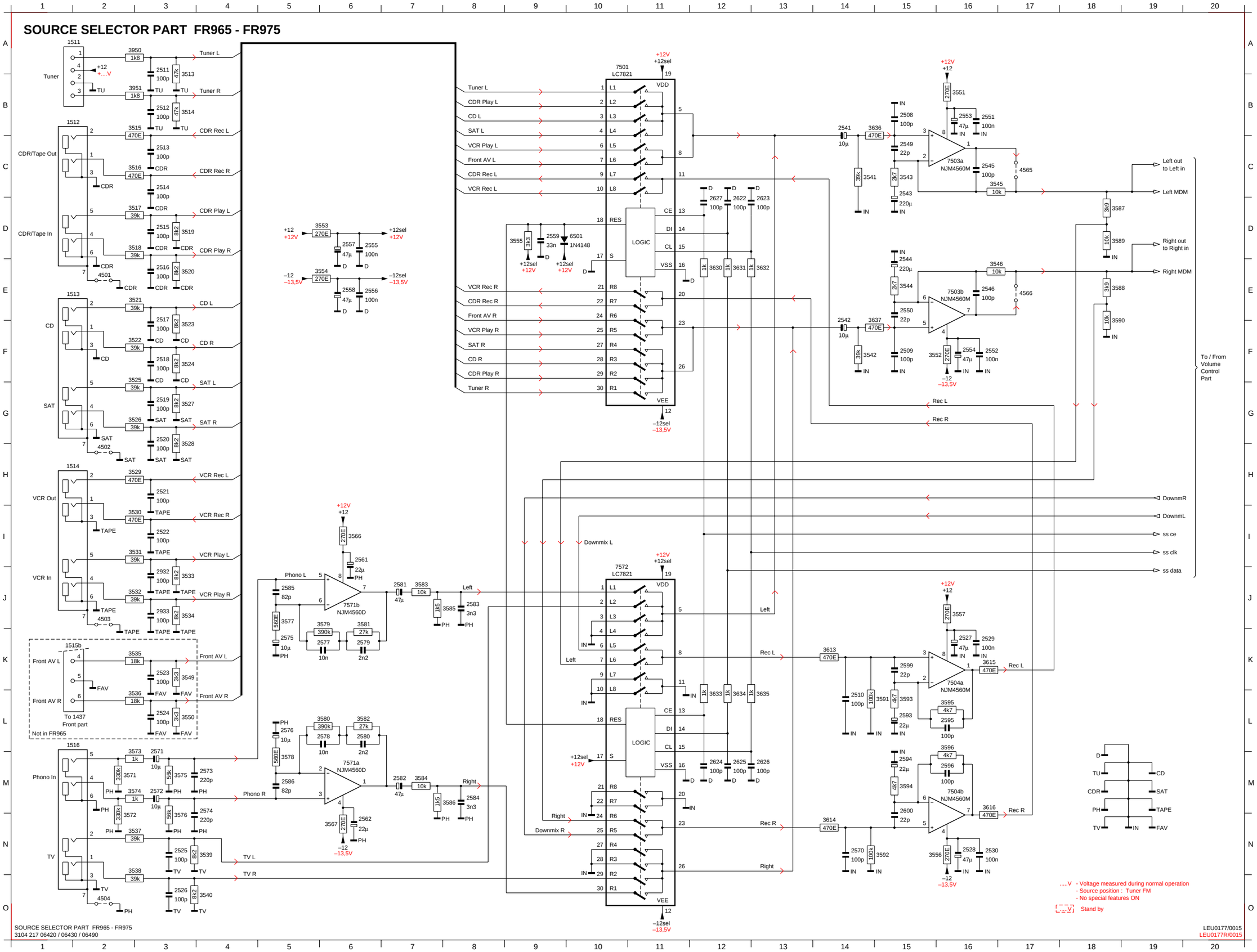

1511	A1	3557	J16
1512	B1	3566	I6
1513	E1	3567	N6
1514	H1	3571	M2
1515b	K1	3572	N2
1516	L1	3573	M2
2508	B15	3574	M2
2509	F15	3575	M3
2510	L14	3576	N3
2511	A3	3577	J5
2512	B3	3578	M5
2513	C3	3579	J5
2514	C3	3580	L5
2515	D3	3581	J6
2516	E3	3582	L6
2517	F3	3583	J7
2518	F3	3584	M7
2519	G3	3585	J8
2520	G3	3586	M8
2521	H3	3587	D18
2522	I3	3588	E18
2523	K3	3589	D18
2524	L3	3590	F18
2525	N3	3591	L15
2526	O3	3592	N15
2527	K16	3593	L15
2528	N16	3594	M15
2529	K16	3595	L16
2530	N16	3596	L16
2541	B14	3613	K14
2542	F14	3614	N14
2543	C15	3615	K16
2544	E15	3616	M16
2545	C16	3630	E12
2546	E16	3631	E12
2549	C15	3632	E13
2550	E15	3633	L12
2551	B16	3634	L12
2552	F16	3635	L13
2553	B16	3636	B14
2554	F16	3637	F14
2555	D6	3950	A2
2556	E6	3951	B2
2557	D6	4501	E2
2558	E6	4502	H2
2559	D9	4503	J2
2561	I6	4504	O2
2562	N6	4565	C17
2570	N14	4566	E17
2571	M3	6501	D10
2572	M3	7501	A10
2573	M4	7503a	C16
2574	M4	7503b	E16
2575	K5	7504a	K16
2576	L5	7504b	M16
2577	K5	7571a	M6
2578	L5	7571b	J6
2579	K6	7572	J10
2580	L6		
2581	J7		
2582	M7		
2583	J8		
2584	M8		
2585	J5		
2586	M5		
2593	L15		
2594	M15		
2595	L16		
2596	M16		
2599	K15		
2600	M15		
2622	D12		
2623	D13		
2624	M12		
2625	M12		
2626	M13		
2627	D12		
2932	J3		
2933	J3		
3513	B3		
3514	B3		
3515	B2		
3516	C2		
3517	D2		
3518	D2		
3519	D3		
3520	E3		
3521	E2		
3522	F2		
3523	F3		
3524	F3		
3525	F2		
3526	G2		
3527	G3		
3528	H3		
3529	H2		
3530	I2		
3531	I2		
3532	J2		
3533	J3		
3534	J3		
3535	K2		
3536	L2		
3537	N2		
3538	N2		
3539	N4		
3540	O4		
3541	C14		
3542	F14		
3543	C15		
3544	E15		
3545	C16		
3546	E16		
3549	K3		
3550	L3		
3551	B16		
3552	F15		
3553	D5		
3554	E5		
3555	D9		
3556	N15		

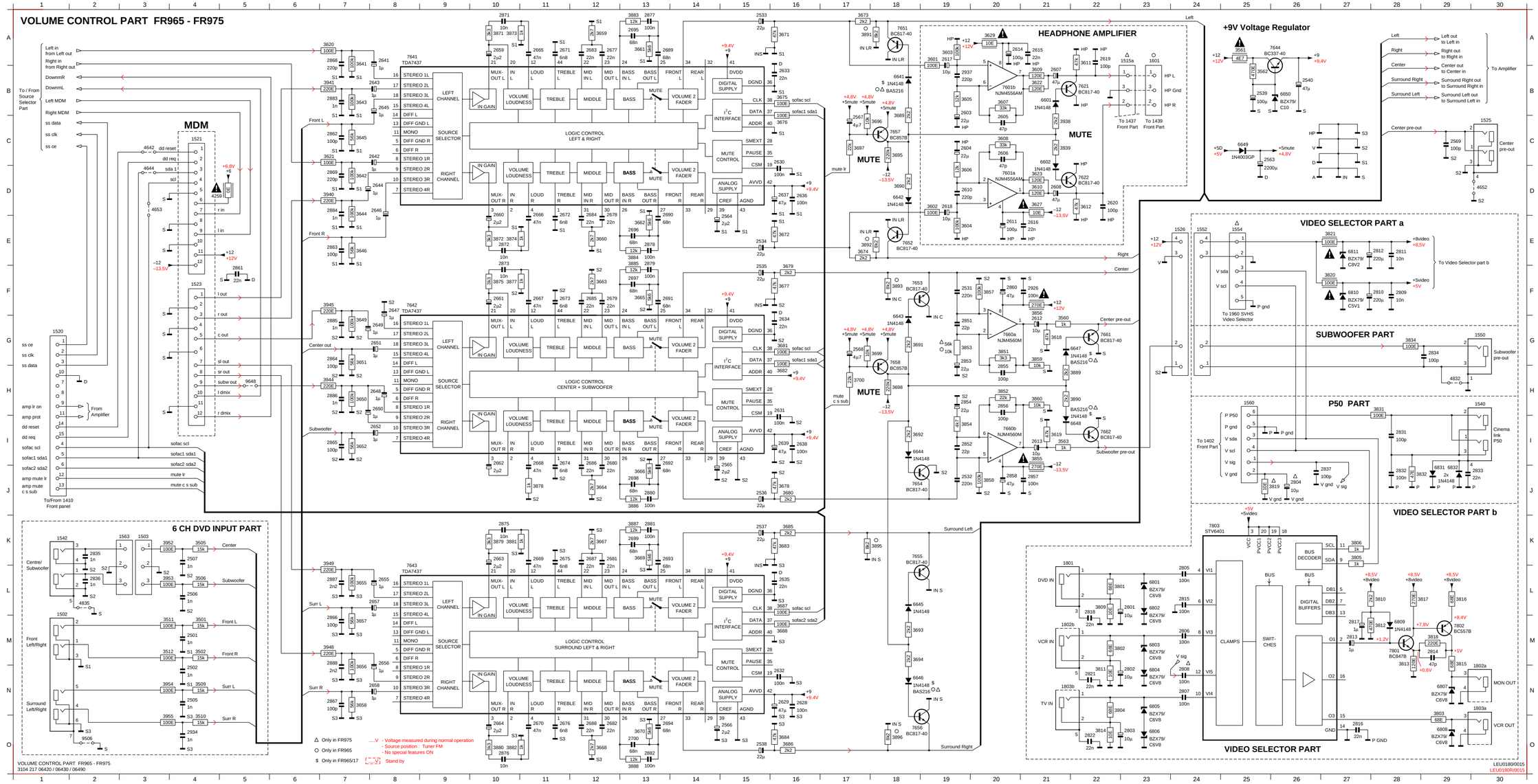

1502	M1	2694	O13	3664	J12	6650	B26
1503	K3	2695	A13	3665	F13	6801	L23
1515a	A23	2696	E13	3666	J13	6802	L23
1520	G1	2697	F13	3667	K12	6803	M23
1521	C4	2698	J13	3668	O12	6804	N23
1523	F4	2699	K13	3669	K13	6805	N23
1525	C30	2700	O13	3670	O13	6806	O23
1526	E24	2801	L23	3671	A16	6807	N29
1540	H30	2802	N23	3672	E16	6808	O29
1542	K1	2803	O23	3673	A17	6809	M28
1550	G30	2804	J26	3674	E17	6810	F27
1552	E24	2805	L24	3675	B16	6811	E27
1554	E25	2806	M24	3676	C16	6831	J29
1560	H25	2807	N24	3677	F16	6832	J29
1563	K2	2808	N24	3678	J16	7601a	D20
1601	A23	2809	F28	3679	F16	7601b	B20
1801	K21	2810	F28	3680	J16	7621	B22
1802a	N30	2811	E28	3681	G16	7622	D22
1802b	M21	2812	E28	3682	H16	7641	A8
1803a	N30	2813	M27	3683	K16	7642	F8
1803b	N21	2814	M29	3684	O16	7643	L8
2501	M4	2815	L24	3685	K16	7644	A25
2502	N4	2816	O27	3686	O16	7651	A18
2505	N4	2817	M27	3687	L16	7652	E18
2506	L4	2818	L22	3688	M16	7653	F18
2507	K4	2821	N22	3689	C18	7654	J18
2531	F19	2822	O22	3690	D18	7655	K18
2532	J19	2831	I28	3691	G18	7656	O18
2533	A19	2832	J28	3692	I18	7657	C18
2534	E15	2833	J30	3693	M18	7658	G18
2535	F15	2834	G29	3694	M18	7660a	G20
2536	J15	2835	K2	3695	C18	7660b	J20
2537	K15	2836	L2	3696	C18	7661	G22
2538	O15	2837	J27	3697	C17	7662	J22
2539	B25	2851	G19	3698	H18	7801	M28
2540	B26	2852	I19	3699	G18	7802	M29
2563	C25	2853	G19	3700	H17	7803	K24
2564	E15	2854	H19	3801	L22	9506	O2
2565	J15	2855	H20	3802	M22	9648	H5
2566	O15	2856	H20	3803	N29		
2567	C17	2857	J21	3804	N22		
2568	G17	2858	J20	3805	K27		
2569	C29	2860	F20	3806	K27		
2603	B19	2861	F5	3809	L22		
2604	C19	2862	C7	3810	L28		
2605	C20	2863	E7	3811	N22		
2606	C20	2864	G7	3812	M28		
2607	B21	2865	I7	3813	N28		
2608	D21	2866	M7	3814	O22		
2610	D19	2867	N7	3815	N29		
2611	E20	2868	A7	3816	L29		
2612	G21	2869	D7	3817	L28		
2613	I21	2871	A10	3818	M29		
2614	A20	2872	E10	3819	J25		
2615	A21	2873	E10	3820	F27		
2616	E21	2875	K10	3821	E27		
2617	A19	2876	O10	3831	H28		
2618	D19	2877	A13	3832	J28		
2619	A22	2878	E13	3834	G20		
2620	D22	2879	E13	3851	G20		
2628	N16	2880	J13	3852	H20		
2629	N16	2881	K13	3853	G19		
2630	C16	2882	O13	3854	I19		
2631	H16	2883	B7	3855	I21		
2632	N16	2884	D7	3856	F21		
2633	B16	2885	G7	3857	F20		
2634	G16	2886	H7	3858	J20		
2635	L16	2887	L7	3859	G21		
2636	D16	2888	M7	3860	H21		
2637	D16	2926	F21	3871	A10		
2638	I16	2934	O4	3872	E10		
2639	I16	2937	B19	3873	A10		
2641	A8	3501	M4	3874	E10		
2642	C7	3502	M4	3875	F10		
2643	B7	3505	K4	3877	F10		
2644	D8	3506	L4	3878	J11		
2645	B8	3509	N4	3879	K10		
2646	D8	3510	O4	3880	O10		
2647	F8	3511	M3	3881	K10		
2648	H8	3512	M3	3882	O10		
2649	G8	3560	G21	3883	A13		
2650	H8	3561	A25	3884	E13		
2651	G8	3562	B25	3885	E13		
2652	I8	3563	I21	3886	J13		
2655	L8	3601	A19	3887	K13		
2656	M8	3602	D19	3888	O13		
2657	L7	3603	A19	3889	H22		
2658	N7	3604	E19	3890	H22		
2659	A10	3605	B19	3891	A17		
2660	E10	3606	D19	3892	E17		
2661	F10	3607	B20	3893	F18		
2662	I10	3608	C20	3895	E13		
2663	K10	3609	B21	3896	O18		
2664	O10	3610	D21	3938	C21		
2665	A11	3611	A22	3939	C21		
2666	E11	3612	D22	3940	D7		
2667	F11	3618	G21	3941	B7		
2668	I11	3619	I21	3944	H7		
2669	K11	3620	A7	3945	F7		
2670	O11	3621	C7	3948	M7		
2671	A11	3622	B21	3949	A7		
2672	E11	3623	D21	3952	K3		
2673	F11	3627	D21	3953	L3		
2674	I11	3629	A20	3954	N3		
2675	K11	3641	B7	3955	O3		
2676	O11	3642	D7	4259	D4		
2677	A12	3643	B7	4642	C3		
2678	E12	3644	E7	4644	D3		
2679	F12	3645	C7	4652	D30		
2680	I12	3646	E7	4653	D3		
2681	K12	3649	G7	4832	H29		
2682	O12	3650	H7	4835	L2		
2683	A12	3651	G7	6601	B21		
2684	E12	3652	I7	6602	C21		
2685	F12	3655	L7	6641	B18		
2686	I12	3656	N7	6642	D18		
2687	K12	3657	M7	6643	G18		
2688	O12	3658	N7	6644	I18		
2689	A13	3659	A12	6645	L18		
2690	E13	3660	E12	6646	N18		
2691	F13	3661	A13	6647	O22		
2692	I13	3662	E13	6648	I22		
2693	K13	3663	F12	6649	C25		

10-7

1251	A1	1260	B3	2256	C6	2266	H3	2273	K4	2279	K5	3254	J3	3265	E5	3273	K6	3294	H6	6256	J7	6262	I3	6280	F6	7257	E5
1252	A1	1261	C3	2257	J5	2267	J6	2274	J7	2281	H5	3256	M3	3266	F7	3274	K7	3295	I7	6257	H3	6263	I4	6281	F6	7258	E6
1253	H1	1266	G9	2259	D7	2268	I4	2275	K4	2282	H7	3257	L3	3268	E5	3275	L7	4253	D5	6258	H3	6264	J7	7251	J5	7908	H6
1254	L1	2251	B3	2260	B7	2269	I4	2276	M5	2287	K4	3258	M3	3269	E6	3291	G4	6251	B4	6259	H4	6267	L6	7252	K5	7910	G6
1255	F1	2253	B4	2262	C7	2270	I5	2277	M7	2290	H5	3261	K5	3270	F7	3292	H7	6253	B5	6260	H6	6268	K2	7253	M3	9260	E5
1257	K9	2254	C4	2264	C7	2271	I7	2278	M2	2295	H6	3262	K6	3271	F8	3293	H6	6255	J7	6261	I3	6276	E7	7254	L6		

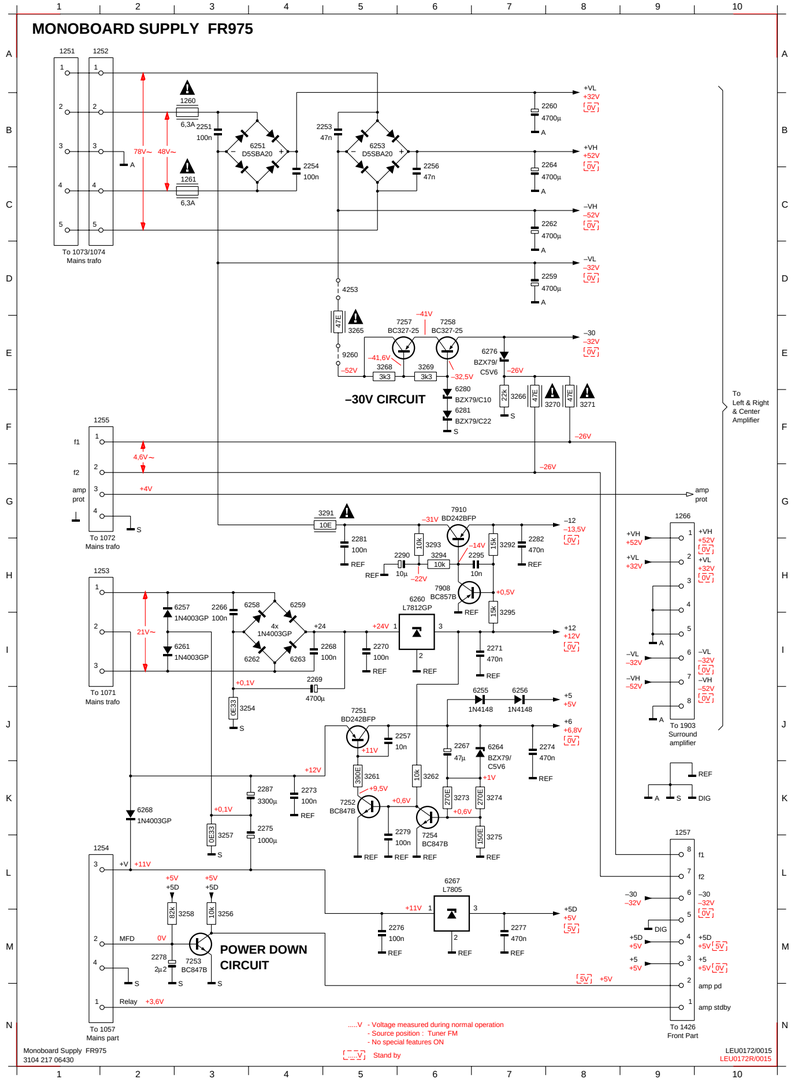

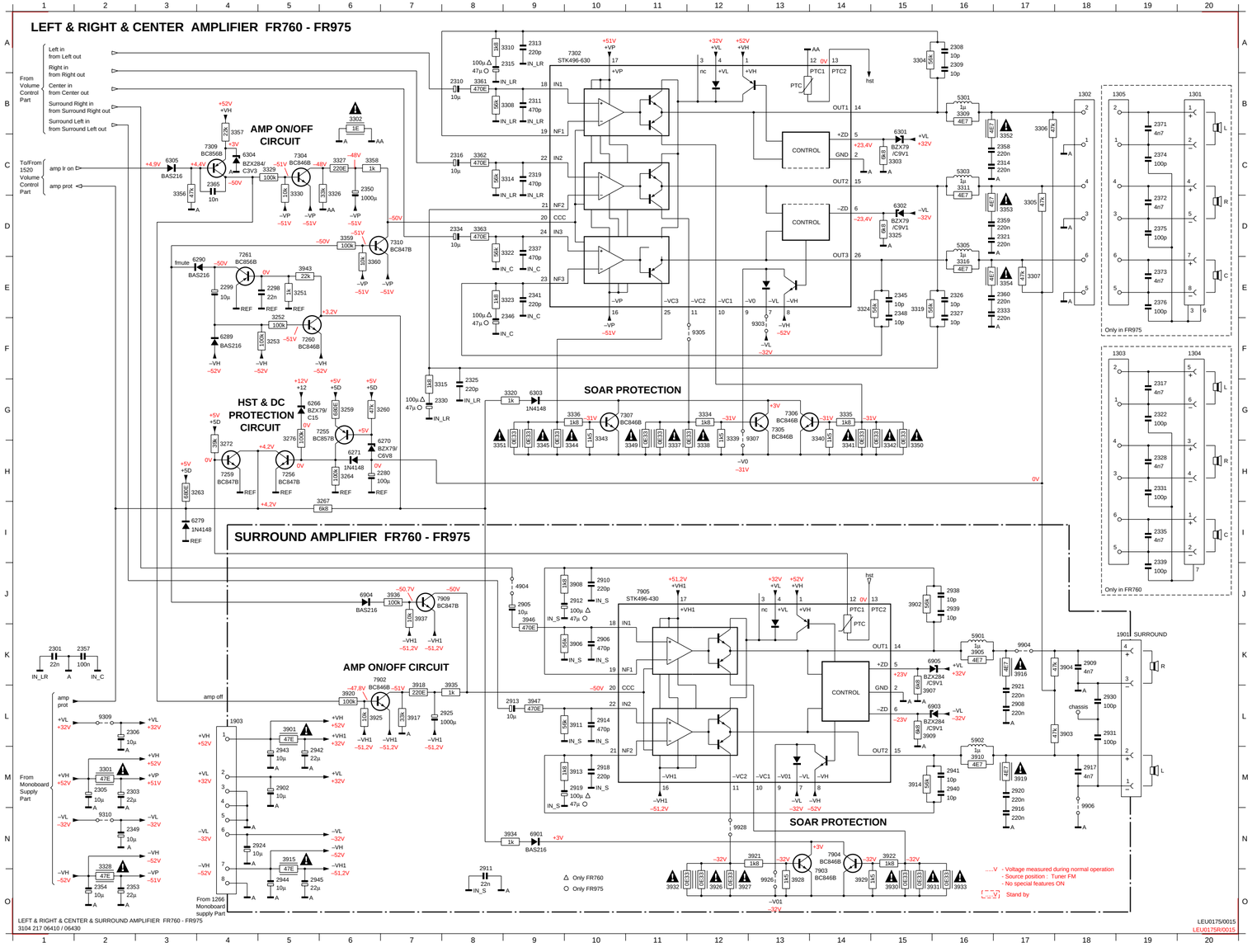

1301	B20	3336	G10																						
1302	B18	3337	H11																						
1303	F18	3338	H12																						
1304	F20	3339	H12																						
1305	B18	3340	H14																						
1901	K19	3341	H14																						
1903	L4	3342	H15																						
2280	H6	3343	H10																						
2298	E5	3344	H10																						
2299	E4	3345	H9																						
2301	K1	3349	H10																						
2303	M2	3350	H15																						
2305	M2	3351	H8																						
2306	L2	3352	C17																						
2308	A16	3353	D17																						
2309	A16	3354	E17																						
2310	B8	3356	D3																						
2311	B9	3357	C4																						
2313	A9	3358	C6																						
2314	C17	3359	D6																						
2315	A8	3360	E6																						
2316	C8	3361	B8																						
2317	G19	3362	C8																						
2319	C9	3363	D8																						
2321	D17	3901	L5																						
2322	G19	3902	J15																						
2325	G8	3903	L18																						
2326	E16	3904	K18																						
2327	E16	3905	K16																						
2328	H19	3906	K10																						
2330	G7	3907	L15																						
2331	H19	3908	J10																						
2333	E17	3909	L15																						
2334	D8	3910	M16																						
2335	I19	3911	L10																						
2337	D9	3913	M10																						
2339	J19	3914	M15																						
2341	E9	3915	N5																						
2345	E15	3916	K17																						
2346	F8	3917	L7																						
2349	N2	3918	L7																						
2350	C6	3919	M17																						
2353	O2	3920	L6																						
2354	O2	3921	N12																						
2357	K2	3922	N15																						
2358	C17	3925	L6																						
2359	D17	3926	O12																						
2360	E17	3927	O13																						
2365	C4	3928	O14																						
2371	B19	3929	O15																						
2372	D19	3931	O11																						
2373	E19	3932	O11																						
2374	C19	3933	O16																						
2375	D19	3934	N9																						
2376	E19	3935	L8																						
2902	M5	3936	J7																						
2905	J9	3937	J7																						
2906	K10	3943	E5																						
2908	L17	3946	J9																						
2909	K18	3947	L9																						
2910	J10	4904	J9																						
2911	O8	5301	B16																						
2912	J10	5303	C16																						
2913	L9	5305	D16																						
2914	L10	5901	K16																						
2916	N17	5902	L16																						
2917	M18	6266	G5																						
2918	M10	6270	H6																						
2919	M10	6271	H6																						
2920	M17	6279	I3																						
2921	L17	6289	F4																						
2924	N4	6290	E3																						
2925	L7	6301	B15																						
2930	L18	6302	D15																						
2931	L18	6303	G9																						
2938	J16	6304	C4																						
2939	J16	6305	C3																						
2940	M16	6901	N9																						
2941	M16	6903	L15																						
2942	M5	6904	J6																						
2943	M5	6905	K15																						
2944	O5	7255	G5																						
2945	O5	7256	H5																						
3251	E5	7259	H4																						
3252	F5	7260	F5																						
3253	F5	7261	E4																						
3259	G6	7302	A10																						
3260	G6	7304	C5																						
3263	H3	7305	G13																						
3264	H6	7306	G13																						
3267	I5	7307	G10																						
3272	H4	7309	C4																						
3276	H5	7310	D7																						
3301	M2	7902	K6																						
3302	B6	7903	O14																						
3303	C15	7904	N14																						
3304	A15	7905	J11																						
3305	D17	7909	J7																						
3306	B17	9303	F13																						
3307	E17	9305	F12																						
3308	B8	9307	H12																						
3309	B16	9309	L2																						
3310	A8	9310	N2																						
3311	C16	9904	K17																						
3314	C8	9906	N18																						
3315	G7	9926	O13																						
3316	E16	9928	N12																						
3319	E15																								
3320	G9																								
3322	D8																								
3323	E8																								
3324	E14																								
3325	D15																								
3326	D6																								
3327	C6																								
3328	N2																								
3329	C5																								
3330	D5																								
3334	G12																								
3335	G14																								

S-VHS VIDEO BOARD

TABLE OF CONTENTS

Circuit diagram 12-2
Component layout 12-3
Partslist 12-4

12-2

SVHS VIDEO SELECTOR

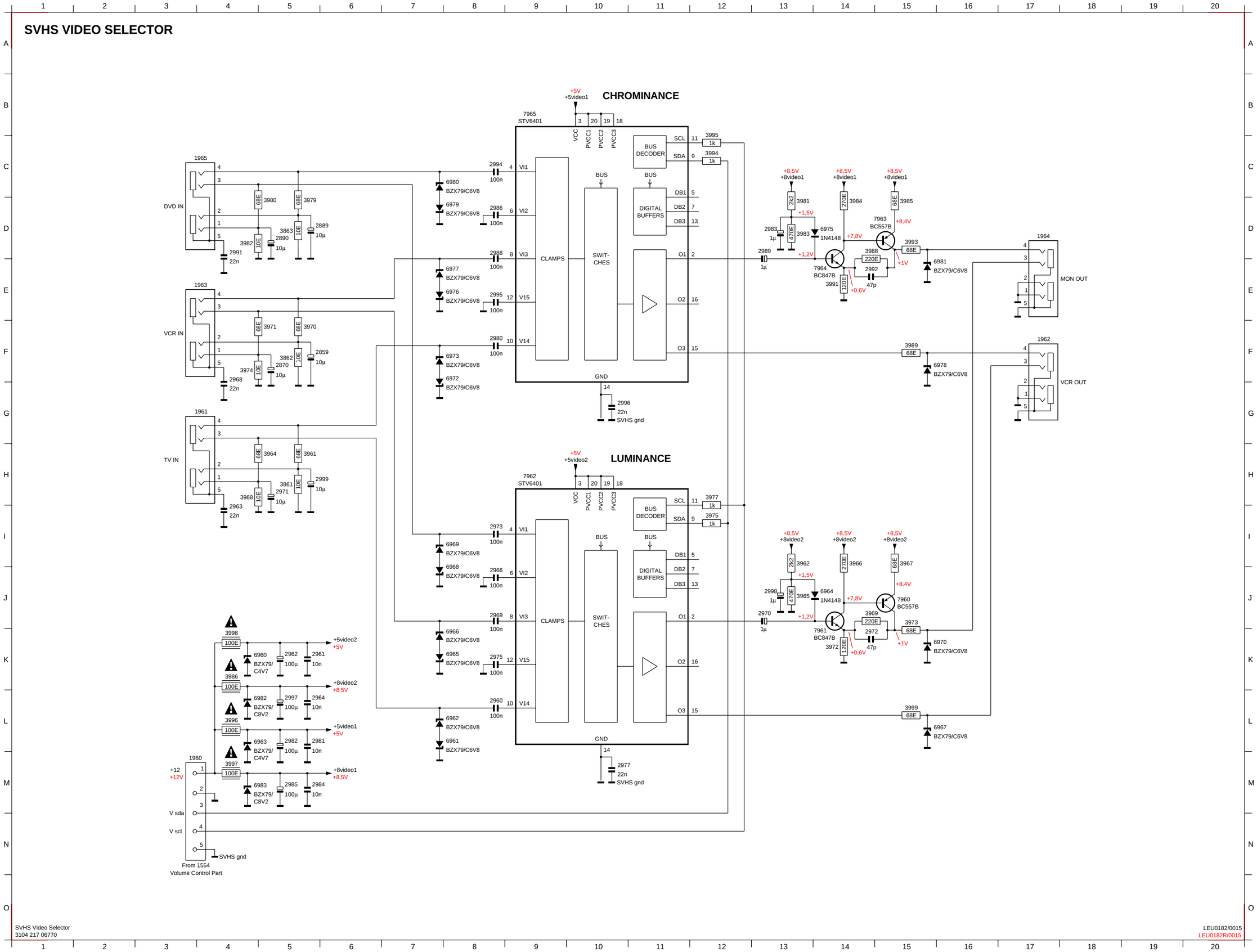

1960	M3
1961	G3
1962	F17
1963	E3
1964	D17
1965	C3
2859	F5
2870	F5
2889	D5
2890	D5
2960	L8
2961	K5
2962	K5
2963	I4
2964	L5
2966	J8
2968	F4
2969	J8
2970	J13
2971	H5
2972	K14
2973	I8
2975	K8
2977	M10
2980	F8
2981	L5
2982	L5
2983	D13
2984	M5
2985	M5
2986	D8
2988	D8
2989	D13
2991	D4
2992	E14
2994	C8
2995	E8
2996	G10
2997	L5
2998	J13
2999	H5
3861	H5
3862	F5
3863	D5
3961	H5
3962	I13
3964	H5
3965	J13
3966	I14
3967	I15
3968	H4
3969	J14
3970	F5
3971	F5
3972	K14
3973	J15
3974	F4
3975	I12
3977	H12
3979	D5
3980	D5
3981	D13
3982	D4
3983	D13
3984	D14
3985	D15
3986	K4
3988	D14
3989	F15
3991	E14
3993	D15
3994	C12
3995	C12
3996	L4
3997	M4
3998	K4
3999	L15
6960	K4
6961	L8
6962	L8
6963	L4
6964	J14
6965	K8
6966	K8
6967	L15
6968	J8
6969	I8
6970	K15
6972	F8
6973	F8
6975	D14
6976	E8
6977	E8
6978	F15
6979	D8
6980	C8
6981	E15
6982	L4
6983	M4
7960	J15
7961	K14
7962	H9
7963	D14
7964	E14
7965	B9

SVHS Video Selector
3104 217 06770

LEU0182/0015
LEU0182R/0015